TABLE OF CONTENTS

HYDRAULIC CYLINDERS

BUSHING TYPE 6
CLEVIS TYPE 9
WELDED THROUGH HOLE TYPE 13
ADJUSTABLE FEMALE CLEVIS TYPE 17
TIE-ROD TYPE 2500 PSI WP 22
TIE-ROD TYPE 3000 PSI WP 26
INVERTED TELESCOPIC TYPE 30
SNOW PLOW TYPE 31
CYLINDERS COMPONENTS 32
SEAL KITS 36
SENSOR CYLINDER TYPE 37

MOTORS

SMALL DISPLACEMENT MOTORS 41
LOW SPEED HIGH TORQUE MOTORS - GEROLOR 42
MOTOR WITH INTEGRATED BRAKES 56
MOTORS ACCESSORIES 58
STEERING UNITS 59
GEAR MOTORS 60
PISTONS MOTORS 62

POWER UNITS

POWER PACKS 64

ELECTRIC MOTORS

ELECTRIC MOTORS 72
DIRECT MOUNT "PUMP-MOTOR ASSEMBLIES" 73

PUMPS

ALUMINUM GEAR PUMPS 76
QUIET GEAR PUMPS 79
CAST IRON GEAR PUMPS 83
VANE & PISTON PUMPS 84
OTHER PUMPS 88
HAND PUMPS 89
CLOSED LOOP PUMPS 90

VALVES, SUBPLATES & MANIFOLDS

DIRECTIONAL VALVES - MONOBLOCK TYPE 96
DIRECTIONAL VALVES - SECTIONAL TYPE 102
PROPORTIONAL DIRECTIONAL VALVES 109
CABLES & LEVERS 114
SOLENOID OPERATED DIRECTIONAL VALVES 116
MODULAR VALVES 120
MANIFOLD BLOCKS 121
SOLENOID VALVES 124
ELECTRIC FLOW DIVERTERS 126
JOYSTICK HANDLES 130
MANUAL FLOW DIVERTERS 131
HIGH PRESSURE BALL VALVES 132
CHECK VALVES & VELOCITY FUSES 133
HOLDING VALVES 134
PRESSURE CONTROL & RELIEF VALVES 136
CARTRIDGES - SUN VS WINNER INTERCHANGES 139
FLOW CONTROL VALVES 140

DIVIDERS

FLOW DIVIDERS - CARTRIDGE TYPE 142
FLOW DIVIDERS - GEAR TYPE 143

ACCUMULATORS

ACCUMULATORS 144
PISTON ACCUMULATORS - ACCESSORIES 145

ACCESSORIES

ELECTRICAL SWITCHES AND TRANSDUCERS 146
PRESSURE GAUGES 147

TANKS

TANKS 148

TANK ACCESSORIES

BREATHERS 154
TANK ACCESSORIES 156
BELLHOUSINGS & COUPLINGS 157

FILTERS

RETURN FILTERS 158
HIGH PRESSURE FILTERS 160
STRAINERS 161

PNEUMATIC

PROCESS VALVES 164
STEAM VALVES 165
CYLINDER 166
MECHANICAL VALVES 170
DIRECTIONAL VALVES 171
FILTERS, REGULATORS & LUBRIFICATORS 172
ONE TOUCH FITTING 173
TUBE 174

HC Hydro Custom

Thanks to our dedicated and experienced team, the Hydro Custom cylinder brand has carved out a place among the market leaders in hydraulics, and developed a stellar reputation in North America.

Conceived by Hydrolico, HC Hydro Custom provides a range of products designed in Canada to meet your needs and your specifications. These products are produced in our combined 200,000 ft^2 production facilities in Canada, USA and Asia. We use an integrated production process managed by the engineering team at our Canadian head office and carefully monitor quality assurance and quality control. Hydro Custom products come with a two-year limited warranty, and our after-sale service is unequaled in the industry.

Custom Cylinders offers you many benefits :

- Experienced adviser in development and design
- Innovative manufacturing solutions tailored to the needs of the clients
- Customized manufacturing solutions adapted to the speed, quantity and desired price
- All our cylinders are designed with the renown Hallite seals, with a few exceptions where other suppliers, such as Trelleborg, are better suited for the application
- A variety of specialized services that can be customized to your needs, including validation of 3D prototypes, repeated rigorous testing, installation and assembly in a contaminant-free environment
- A wide range of standard cylinders provided from our three warehouses located across North America, in addition to several points of service from trading partners
- A product with a quality/price ratio unmatched in our market

Because we design our own models and have our own production facilities, we can stand behind our products 100% from start to finish. We offer full hydraulic component repair and modification services across Canada.

We are proud to contribute to the success of many companies that produce mobile hydraulic equipment to various types of industries.

UTILITY WELDED CYLINDERS - BUSHING TYPE

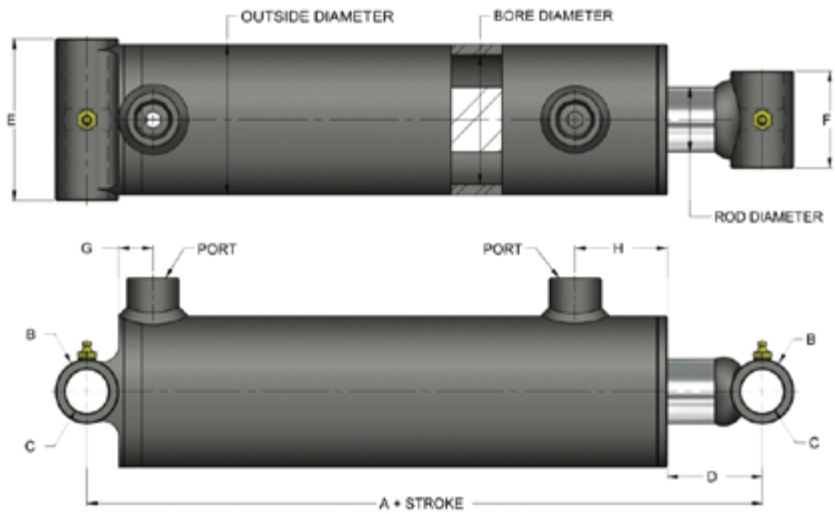

PART NUMBER	CYLINDER BORE	OUTSIDE DIAMETER	ROD DIAMETER	A	B	C	D	E	F	G	H	PORTS
BU15XX-S	1.50”	1.875”	1.00”	8.00”	1.25”	0.76”	2.62”	2.25”	2.00”	1.06’’	1.87’’	SAE 4
BU20XX-S	2.00”	2.375”	1.25”	8.00”	1.50”	1.01”	2.25”	2.75”	2.25”	1.00’’	2.06’’	SAE 6
BU25XX-S	2.50”	2.875”	1.50”	8.00”	1.50”	1.01”	2.25”	3.25”	2.25”	0.81’’	2.18’’	SAE 8
BU30XX-S	3.00”	3.50”	1.50”	8.00”	1.50”	1.01”	2.25”	3.75”	2.25”	0.81’’	2.18’’	SAE 8
BU35XX-S	3.50”	4.00”	1.75”	10.00”	2.00”	1.26”	4.00”	4.25”	2.25”	0.81’’	2.18’’	SAE 8
BU40XX-S	4.00”	4.50”	2.00”	10.00”	2.25”	1.51”	3.75”	4.75”	2.50”	0.81’’	2.18’’	SAE 8
BU50XX-S	5.00”	5.50”	2.50”	12.00”	3.00”	**1.76”	3.50”	5.75”	3.25”	1.25’’	2.75’’	SAE 12

** PIN SIZE WITH INSERT, 2" WHEN REMOVED
MAXIMUM RETRACTED WORKING PRESSURE : 3000 psi

MAXIMUM EXTENDED WORKING PRESSURE : SEE TABLE
RETRACTED AND STROKE TOLERANCE ± 1/8"

WELDED BUSHING									
PART NUMBER	BORE & STROKE	DIMENSIONS		ROD DIAMETER	PIN SIZE	PORTS*	COLUMN LOADS (LBS)	PRESSURE (PSI)	WEIGHT (LBS)
		RETRACTED	EXTENDED						
BU1504-S	1.5” X 4”	12”	16”	1”	3/4”	SAE 4	5300	3000	8
BU1506-S	1.5” X 6”	14”	20”				5300	3000	9
BU1508-S	1.5” X 8”	16”	24”				5300	3000	10
BU1510-S	1.5” X 10”	18”	28”				5300	3000	12
BU1512-S	1.5” X 12”	20”	32”				5300	3000	13
BU1514-S	1.5” X 14”	22”	36”				5300	3000	14
BU1516-S	1.5” X 16”	24”	40”				5300	3000	15
BU1518-S	1.5” X 18”	26”	44”				4800	2700	17
BU1520-S	1.5” X 20”	28”	48”				4000	2300	18
BU1524-S	1.5” X 24”	32”	56”				3000	1700	20

* NPT PORTS ARE ALSO AVAILABLE.
NOTE : COLUMN LOAD IS THE MAXIMUM PUSHING LOAD SUGGESTED USING A MINIMUM SAFETY FACTOR OF 2 AND BASED ON A PIN TO PIN MOUNTING CALCULATION.

HYDRO CUSTOM IS NOT RESPONSIBLE FOR INCORRECT RESULTS OBTAINED WITH FIGURES IN THIS DOCUMENT. INFORMATION IS FOR REFERENCE ONLY. NO OTHER CONDITIONS ARE EXPRESSED OR IMPLIED.

WELDED BUSHING									
PART NUMBER	BORE & STROKE	DIMENSIONS		ROD DIAMETER	PIN SIZE	PORTS*	COLUMN LOAD (LBS)	PRESSURE (PSI)	WEIGHT (LBS)
		RETRACTED	EXTENDED						
BU2004-S	2" X 4"	12"	16"	1-1/4"	1"	SAE 6	9400	3000	12
BU2006-S	2" X 6"	14"	20"				9400	3000	13
BU2008-S	2" X 8"	16"	24"				9400	3000	15
BU2010-S	2" X 10"	18"	28"				9400	3000	17
BU2012-S	2" X 12"	20"	32"				9400	3000	19
BU2014-S	2" X 14"	22"	36"				9400	3000	20
BU2016-S	2" X 16"	24"	40"				9400	3000	22
BU2018-S	2" X 18"	26"	44"				9400	3000	24
BU2020-S	2" X 20"	28"	48"				9400	3000	25
BU2024-S	2" X 24"	32"	56"				7300	2300	29
BU2028-S	2" X 28"	36"	64"				5600	1700	32
BU2030-S	2" X 30"	38"	68"				4900	1500	34
BU2032-S	2" X 32"	40"	72"				4400	1400	35
BU2036-S	2" X 36"	44"	80"				3500	1100	39
BU2040-S	2" X 40"	48"	88"				2900	900	42
BU2048-S	2" X 48"	56"	104"				2100	600	49
BU2504-S	2.5" X 4"	12"	16"	1-1/2"	1"	SAE 8	14700	3000	16
BU2506-S	2.5" X 6"	14"	20"				14700	3000	18
BU2508-S	2.5" X 8"	16"	24"				14700	3000	20
BU2510-S	2.5" X 10"	18"	28"				14700	3000	22
BU2512-S	2.5" X 12"	20"	32"				14700	3000	24
BU2514-S	2.5" X 14"	22"	36"				14700	3000	27
BU2516-S	2.5" X 16"	24"	40"				14700	3000	29
BU2518-S	2.5" X 18"	26"	44"				14700	3000	31
BU2520-S	2.5" X 20"	28"	48"				14700	3000	33
BU2524-S	2.5" X 24"	32"	56"				14700	3000	38
BU2528-S	2.5" X 28"	36"	64"				11600	2300	42
BU2530-S	2.5" X 30"	38"	68"				10300	2100	45
BU2532-S	2.5" X 32"	40"	72"				9200	1800	47
BU2536-S	2.5" X 36"	44"	80"				7400	1500	51
BU2540-S	2.5" X 40"	48"	88"				6100	1200	56
BU2548-S	2.5" X 48"	56"	104"				4400	800	65

* NPT PORTS ARE ALSO AVAILABLE.
NOTE : COLUMN LOAD IS THE MAXIMUM PUSHING LOAD SUGGESTED USING A MINIMUM SAFETY FACTOR OF 2 AND BASED ON A PIN TO PIN MOUNTING CALCULATION.

HYDRO CUSTOM IS NOT RESPONSIBLE FOR INCORRECT RESULTS OBTAINED WITH FIGURES IN THIS DOCUMENT. INFORMATION IS FOR REFERENCE ONLY. NO OTHER CONDITIONS ARE EXPRESSED OR IMPLIED.

UTILITY WELDED CYLINDERS - BUSHING TYPE

WELDED BUSHING									
PART NUMBER	BORE & STROKE	DIMENSIONS		ROD DIAMETER	PIN SIZE	PORTS*	COLUMN LOAD (LBS)	PRESSURE (PSI)	WEIGHT (LBS)
		RETRACTED	EXTENDED						
BU3004-S	3" X 4"	12"	16"	1-1/2"	1"	SAE 8	21200	3000	19
BU3006-S	3" X 6"	14"	20"				21200	3000	22
BU3008-S	3" X 8"	16"	24"				21200	3000	24
BU3010-S	3" X 10"	18"	28"				21200	3000	27
BU3012-S	3" X 12"	20"	32"				21200	3000	29
BU3014-S	3" X 14"	22"	36"				21200	3000	32
BU3016-S	3" X 16"	24"	40"				21200	3000	34
BU3018-S	3" X 18"	26"	44"				21200	3000	36
BU3020-S	3" X 20"	28"	48"				20700	2900	39
BU3024-S	3" X 24"	32"	56"				15200	2100	44
BU3028-S	3" X 28"	36"	64"				11600	1600	49
BU3030-S	3" X 30"	38"	68"				10300	1400	51
BU3032-S	3" X 32"	40"	72"				9200	1300	53
BU3036-S	3" X 36"	44"	80"				7400	1000	58
BU3040-S	3" X 40"	48"	88"				6100	800	63
BU3048-S	3" X 48"	56"	104"				4400	600	73
BU3504-S	3.5" X 4"	14"	18"	1-3/4"	1-1/4"	SAE 8	28800	3000	27
BU3506-S	3.5" X 6"	16"	22"				28800	3000	30
BU3508-S	3.5" X 8"	18"	26"				28800	3000	33
BU3510-S	3.5" X 10"	20"	30"				28800	3000	36
BU3512-S	3.5" X 12"	22"	34"				28800	3000	39
BU3514-S	3.5" X 14"	24"	38"				28800	3000	42
BU3516-S	3.5" X 16"	26"	42"				28800	3000	45
BU3518-S	3.5" X 18"	28"	46"				28800	3000	48
BU3520-S	3.5" X 20"	30"	50"				28800	3000	51
BU3524-S	3.5" X 24"	34"	58"				26200	2700	57
BU3528-S	3.5" X 28"	38"	66"				20200	2100	63
BU3530-S	3.5" X 30"	40"	70"				18000	1800	66
BU3532-S	3.5" X 32"	42"	74"				16100	1600	69
BU3536-S	3.5" X 36"	46"	82"				13100	1300	75
BU3540-S	3.5" X 40"	50"	90"				10900	1100	81
BU3548-S	3.5" X 48"	58"	106"				7800	800	94
BU4004-S	4" X 4"	14"	18"	2"	1-1/2"	SAE 8	37600	3000	34
BU4006-S	4" X 6"	16"	22"				37600	3000	38
BU4008-S	4" X 8"	18"	26"				37600	3000	41
BU4010-S	4" X 10"	20"	30"				37600	3000	45
BU4012-S	4" X 12"	22"	34"				37600	3000	49
BU4014-S	4" X 14"	24"	38"				37600	3000	52
BU4016-S	4" X 16"	26"	42"				37600	3000	56
BU4018-S	4" X 18"	28"	46"				37600	3000	59
BU4020-S	4" X 20"	30"	50"				37600	3000	63
BU4024-S	4" X 24"	34"	58"				37600	3000	70
BU4028-S	4" X 28"	38"	66"				34600	2700	78
BU4030-S	4" X 30"	40"	70"				30700	2400	81
BU4032-S	4" X 32"	42"	74"				27500	2100	85
BU4036-S	4" X 36"	46"	82"				22400	1700	92
BU4040-S	4" X 40"	50"	90"				18600	1400	99
BU4048-S	4" X 48"	58"	106"				13400	1000	114

* NPT PORTS ARE ALSO AVAILABLE.
NOTE : COLUMN LOAD IS THE MAXIMUM PUSHING LOAD SUGGESTED USING A MINIMUM SAFETY FACTOR OF 2 AND BASED ON A PIN TO PIN MOUNTING CALCULATION.

HYDRO CUSTOM IS NOT RESPONSIBLE FOR INCORRECT RESULTS OBTAINED WITH FIGURES IN THIS DOCUMENT. INFORMATION IS FOR REFERENCE ONLY. NO OTHER CONDITIONS ARE EXPRESSED OR IMPLIED.

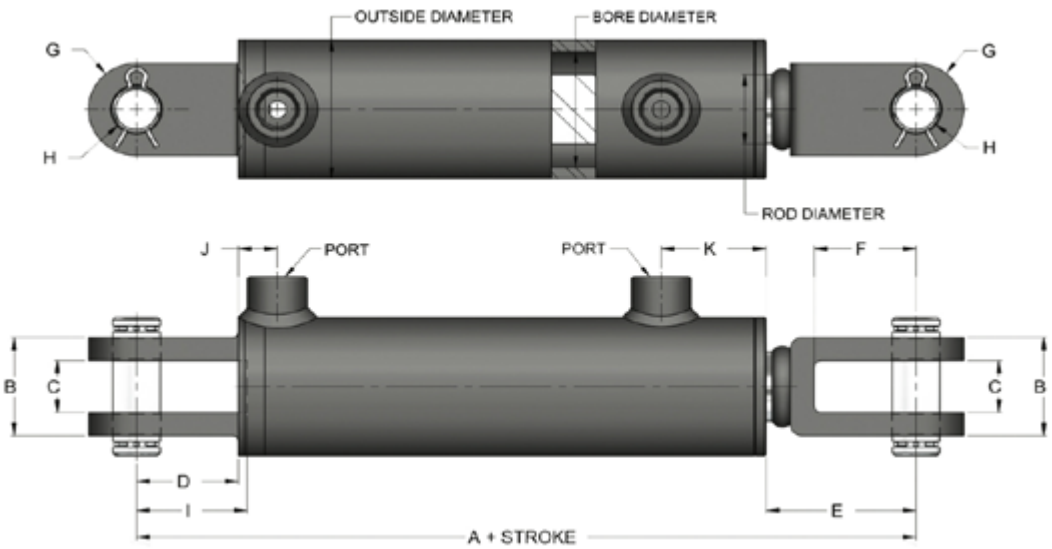

PART NUMBER	CYLINDER BORE	OUTSIDE DIAMETER	ROD DIAMETER	*A	B	C	D	*E	F	G	H	I	J	K	PORTS*
CL15-XX-S	1.50”	1.875”	1.00”	8.25”	1.62”	0.87”	1.37”	2.25”	1.37”	1.50”	0.76”	-	0.93”	1.87”	SAE 4
CL20-XX-S	2.00”	2.375”	1.25”	10.25”	2.12”	1.12”	2.12”	3.12”	2.12”	2.00”	1.01”	-	1.00”	2.06”	SAE6
CL25-XX-S	2.50”	2.875”	1.50”	10.25”	2.12”	1.12”	2.12”	3.12”	2.12”	2.00”	1.01”	-	0.81”	2.18”	SAE 8
CL30-XX-S	3.00”	3.50”	1.50”	10.25”	2.12”	1.12”	2.12”	3.12”	2.12”	2.00”	1.01”	-	0.81”	2.18”	SAE 8
CL35-XX-S	3.50”	4.00”	1.75”	10.25”	2.37”	1.12”	2.00”	3.12”	2.12”	2.00”	1.01”	2.12”	0.93”	2.18”	SAE 8
CL40-XX-S	4.00”	4.50”	2.00”	10.25”	2.37”	1.12”	1.75”	3.12”	2.00”	2.00”	1.01”	2.00”	1.06”	2.18”	SAE 8
CL50-XX-S	5.00”	5.50”	2.50”	13.00”	3.12”	1.62”	2.25”	3.62”	2.25”	3.00”	1.51”	-	1.37”	2.75”	SAE 12

1. FOR 8" STROKE : A = 12.25" (2" TO 4" BORE)
2. FOR 8" STROKE : E = 5.12" (2" TO 4" BORE)
* NPT PORTS ARE ALSO AVAILABLE FROM 1.5" TO 4" BORE CYLINDERS

MAXIMUM RETRACTED WORKING PRESSURE : 3000 psi
MAXIMUM EXTENDED WORKING PRESSURE : SEE TABLE
RETRACTED AND STROKE TOLERANCE ± 1/8"

WELDED FEMALE CLEVIS TYPE									
PART NUMBER	BORE & STROKE	DIMENSIONS		ROD DIAMETER	PIN SIZE	PORTS*	COLUMN LOADS (LBS)	PRESSURE (PSI)	WEIGHT (LBS)
		RETRACTED	EXTENDED						
CL1504-S	1.5" X 4"	12-1/4"	16-1/4"	1"	3/4"	SAE 4	5300	3000	8
CL1506-S	1.5" X 6"	14-1/4"	20-1/4"				5300	3000	9
CL1508-S	1.5" X 8"	16-1/4"	24-1/4"				5300	3000	11
CL1510-S	1.5" X 10"	18-1/4"	28-1/4"				5300	3000	12
CL1512-S	1.5" X 12"	20-1/4"	32-1/4"				5300	3000	13
CL1514-S	1.5" X 14"	22-1/4"	36-1/4"				5300	3000	14
CL1516-S	1.5" X 16"	24-1/4"	40-1/4"				5300	3000	15
CL1518-S	1.5" X 18"	26-1/4"	44-1/4"				4800	2700	17
CL1520-S	1.5" X 20"	28-1/4"	48-1/4"				4000	2200	18
CL1524-S	1.5" X 24"	32-1/4"	56-1/4"				2900	1600	20

* NPT PORTS ARE ALSO AVAILABLE.
NOTE : COLUMN LOAD IS THE MAXIMUM PUSHING LOAD SUGGESTED USING A MINIMUM SAFETY FACTOR OF 2 AND BASED ON A PIN TO PIN MOUNTING CALCULATION.

HYDRO CUSTOM IS NOT RESPONSIBLE FOR INCORRECT RESULTS OBTAINED WITH FIGURES IN THIS DOCUMENT. INFORMATION IS FOR REFERENCE ONLY. NO OTHER CONDITIONS ARE EXPRESSED OR IMPLIED.

UTILITY WELDED CYLINDERS - CLEVIS TYPE

WELDED FEMALE CLEVIS TYPE									
PART NUMBER	BORE & STROKE	DIMENSIONS		ROD DIAMETER	PIN SIZE	PORTS*	COLUMN LOADS (LBS)	PRESSURE (PSI)	WEIGHT (LBS)
		RETRACTED	EXTENDED						
CL2004-S	2" X 4"	14-1/4"	18-1/4"	1-1/4"	1"	SAE 6	9400	3000	14
CL2006-S	2" X 6"	16-1/4"	22-1/4"				9400	3000	16
CL2008-S	2" X 8"	20-1/4"	28-1/4"				9400	3000	18
CL2010-S	2" X 10"	20-1/4"	30-1/4"				9400	3000	19
CL2012-S	2" X 12"	22-1/4"	34-1/4"				9400	3000	21
CL2014-S	2" X 14"	24-1/4"	38-1/4"				9400	3000	23
CL2016-S	2" X 16"	26-1/4"	42-1/4"				9400	3000	25
CL2018-S	2" X 18"	28-1/4"	46-1/4"				9400	3000	26
CL2020-S	2" X 20"	30-1/4"	50-1/4"				9100	2900	28
CL2024-S	2" X 24"	34-1/4"	58-1/4"				6700	2100	31
CL2028-S	2" X 28"	38-1/4"	66-1/4"				5200	1600	35
CL2030-S	2" X 30"	40-1/4"	70-1/4"				4600	1400	36
CL2032-S	2" X 32"	42-1/4"	74-1/4"				4100	1300	38
CL2034-S	2" X 34"	44-1/4"	78-1/4"				3700	1100	40
CL2036-S	2" X 36"	46-1/4"	82-1/4"				3400	1000	42
CL2040-S	2" X 40"	50-1/4"	90-1/4"				2800	800	45
CL2048-S	2" X 48"	58-1/4"	106-1/4"				2000	600	52
CL2504-S	2.5" X 4"	14-1/4"	18-1/4"	1-1/2"	1"	SAE 8	14700	3000	18
CL2506-S	2.5" X 6"	16-1/4"	22-1/4"				14700	3000	20
CL2508-S	2.5" X 8"	20-1/4"	28-1/4"				14700	3000	24
CL2510-S	2.5" X 10"	20-1/4"	30-1/4"				14700	3000	25
CL2512-S	2.5" X 12"	22-1/4"	34-1/4"				14700	3000	27
CL2514-S	2.5" X 14"	24-1/4"	38-1/4"				14700	3000	29
CL2516-S	2.5" X 16"	26-1/4"	42-1/4"				14700	3000	32
CL2518-S	2.5" X 18"	28-1/4"	46-1/4"				14700	3000	34
CL2520-S	2.5" X 20"	30-1/4"	50-1/4"				14700	3000	36
CL2524-S	2.5" X 24"	34-1/4"	58-1/4"				14000	2800	40
CL2528-S	2.5" X 28"	38-1/4"	66-1/4"				10800	2200	45
CL2530-S	2.5" X 30"	40-1/4"	70-1/4"				9600	1900	47
CL2532-S	2.5" X 32"	42-1/4"	74-1/4"				8600	1700	49
CL2534-S	2.5" X 34"	44-1/4"	78-1/4"				7700	1500	52
CL2536-S	2.5" X 36"	46-1/4"	82-1/4"				7000	1400	54
CL2540-S	2.5" X 40"	50-1/4"	90-1/4"				5800	1100	58
CL2548-S	2.5" X 48"	58-1/4"	106-1/4"				4200	800	67

HYDRO CUSTOM IS NOT RESPONSIBLE FOR INCORRECT RESULTS OBTAINED WITH FIGURES IN THIS DOCUMENT. INFORMATION IS FOR REFERENCE ONLY. NO OTHER CONDITIONS ARE EXPRESSED OR IMPLIED.

WELDED FEMALE CLEVIS TYPE									
PART NUMBER	BORE & STROKE	DIMENSIONS		ROD DIAMETER	PIN SIZE	PORTS*	COLUMN LOADS (LBS)	PRESSURE (PSI)	WEIGHT (LBS)
		RETRACTED	EXTENDED						
CL3004-S	3" X 4"	14-1/4"	18-1/4"	1-1/2"	1"	SAE 8	21200	3000	22
CL3006-S	3" X 6"	16-1/4"	22-1/4"				21200	3000	24
CL3008-S	3" X 8"	20-1/4"	28-1/4"				21200	3000	27
CL3010-S	3" X 10"	20-1/4"	30-1/4"				21200	3000	29
CL3012-S	3" X 12"	22-1/4"	34-1/4"				21200	3000	31
CL3014-S	3" X 14"	24-1/4"	38-1/4"				21200	3000	34
CL3016-S	3" X 16"	26-1/4"	42-1/4"				21200	3000	36
CL3018-S	3" X 18"	28-1/4"	46-1/4"				21200	3000	39
CL3020-S	3" X 20"	30-1/4"	50-1/4"				18800	2600	41
CL3024-S	3" X 24"	34-1/4"	58-1/4"				14000	1900	46
CL3028-S	3" X 28"	38-1/4"	66-1/4"				10800	1500	51
CL3030-S	3" X 30"	40-1/4"	70-1/4"				9600	1300	53
CL3032-S	3" X 32"	42-1/4"	74-1/4"				8600	1200	56
CL3034-S	3" X 34"	44-1/4"	78-1/4"				7700	1100	58
CL3036-S	3" X 36"	46-1/4"	82-1/4"				7000	900	61
CL3504-S	3.5" X 4"	14-1/4"	18-1/4"	1-3/4"	1"	SAE 8	28800	3000	27
CL3506-S	3.5" X 6"	16-1/4"	22-1/4"				28800	3000	30
CL3508-S	3.5" X 8"	20-1/4"	28-1/4"				28800	3000	35
CL3510-S	3.5" X 10"	20-1/4"	30-1/4"				28800	3000	36
CL3512-S	3.5" X 12"	22-1/4"	34-1/4"				28800	3000	39
CL3514-S	3.5" X 14"	24-1/4"	38-1/4"				28800	3000	42
CL3516-S	3.5" X 16"	26-1/4"	42-1/4"				28800	3000	46
CL3518-S	3.5" X 18"	28-1/4"	46-1/4"				28800	3000	49
CL3520-S	3.5" X 20"	30-1/4"	50-1/4"				28800	3000	52
CL3524-S	3.5" X 24"	34-1/4"	58-1/4"				26000	2700	58
CL3528-S	3.5" X 28"	38-1/4"	66-1/4"				20100	2000	64
CL3530-S	3.5" X 30"	40-1/4"	70-1/4"				17900	1800	67
CL3532-S	3.5" X 32"	42-1/4"	74-1/4"				16000	1600	70
CL3534-S	3.5" X 34"	44-1/4"	78-1/4"				14400	1500	73
CL3536-S	3.5" X 36"	46-1/4"	82-1/4"				13000	1300	76
CL4004-S	4" X 4"	14-1/4"	18-1/4"	2"	1"	SAE 8	37600	3000	33
CL4006-S	4" X 6"	16-1/4"	22-1/4"				37600	3000	37
CL4008-S	4" X 8"	20-1/4"	28-1/4"				37600	3000	42
CL4010-S	4" X 10"	20-1/4"	30-1/4"				37600	3000	44
CL4012-S	4" X 12"	22-1/4"	34-1/4"				37600	3000	48
CL4014-S	4" X 14"	24-1/4"	38-1/4"				37600	3000	52
CL4016-S	4" X 16"	26-1/4"	42-1/4"				37600	3000	55
CL4018-S	4" X 18"	28-1/4"	46-1/4"				37600	3000	59
CL4020-S	4" X 20"	30-1/4"	50-1/4"				37600	3000	63
CL4024-S	4" X 24"	34-1/4"	58-1/4"				37600	3000	70
CL4028-S	4" X 28"	38-1/4"	66-1/4"				34300	2700	77
CL4030-S	4" X 30"	40-1/4"	70-1/4"				30500	2400	81
CL4032-S	4" X 32"	42-1/4"	74-1/4"				27300	2100	85
CL4034-S	4" X 34"	44-1/4"	78-1/4"				24600	1900	89
CL4036-S	4" X 36"	46-1/4"	82-1/4"				22200	1700	92

HYDRO CUSTOM IS NOT RESPONSIBLE FOR INCORRECT RESULTS OBTAINED WITH FIGURES IN THIS DOCUMENT. INFORMATION IS FOR REFERENCE ONLY. NO OTHER CONDITIONS ARE EXPRESSED OR IMPLIED.

UTILITY WELDED CYLINDERS - BUSHING & CLEVIS TYPE

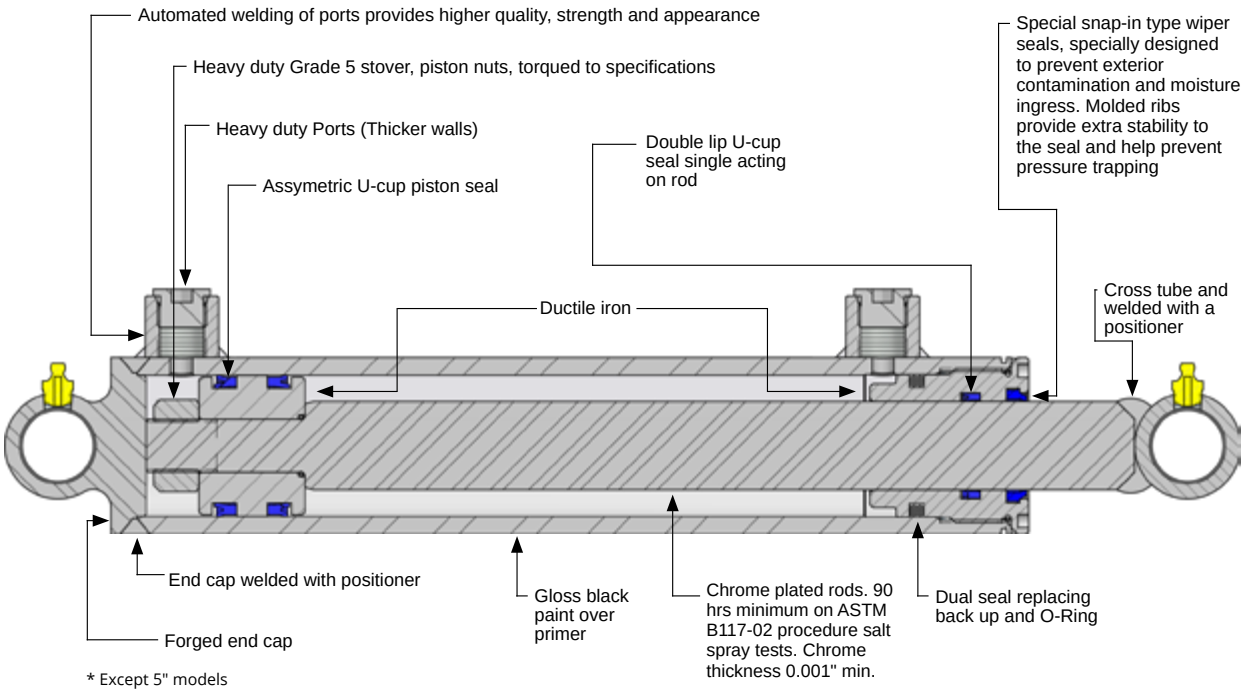

* Except 5" models

SEAL TEMPERATURE RANGE : -30°C / +100°C (-22°F / +212°F)
SEAL MAXIMUM SPEED : 3 FT / SEC

- All seals are top grade/first quality North American made
- All components are cnc machined for higher accuracy and conformity
- Quality controlled in China by qualified Canadian technicians
- 100% Tested. All cylinders are submitted to static and dynamic pressure tests to recommended specifications

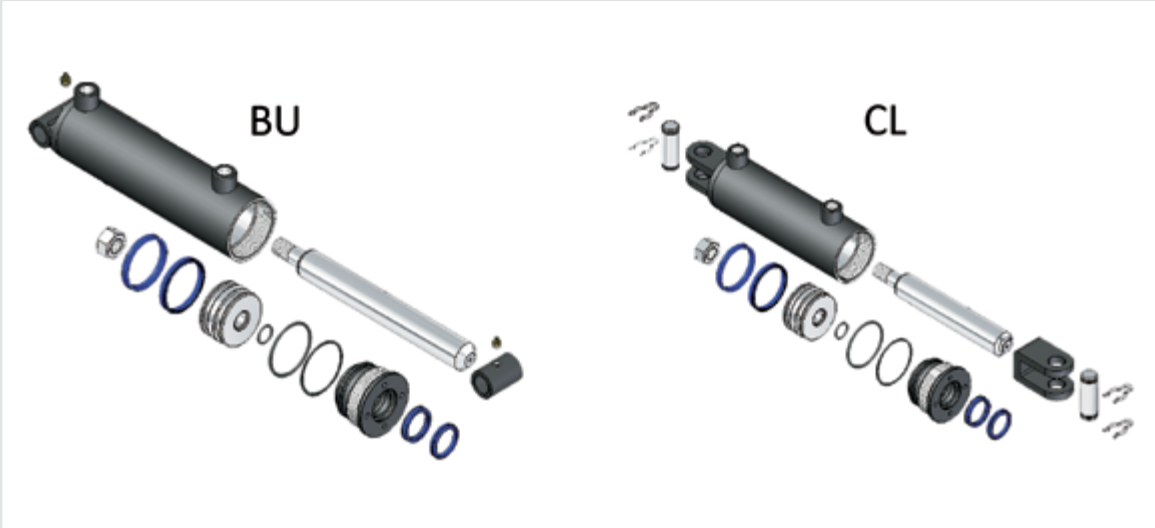

HYDRO CUSTOM IS NOT RESPONSIBLE FOR INCORRECT RESULTS OBTAINED WITH FIGURES IN THIS DOCUMENT. INFORMATION IS FOR REFERENCE ONLY. NO OTHER CONDITIONS ARE EXPRESSED OR IMPLIED.

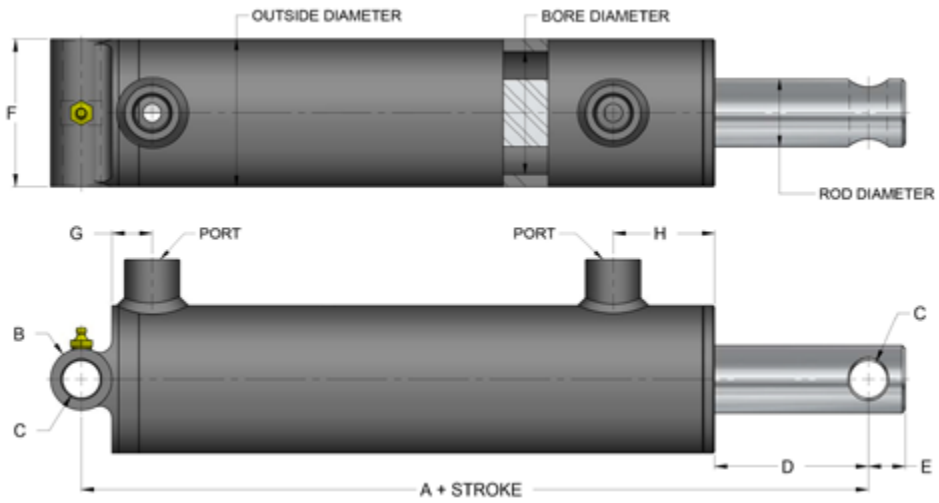

PART NUMBER	CYLINDER BORE	OUTSIDE DIAMETER	ROD DIAMETER	A	B	C	D	E	F	G	H	PORTS*
WT3-15XX-S	1.50”	1.875”	1.00”	7.00”	1.25”	0.64”	2.43”	0.62”	2.00”	0.81’’	1.87’’	SAE 6
WT3-20XX-S	2.00”	2.375”	1.25”	8.00”	1.25”	0.76”	3.37”	0.75”	2.50”	0.81’’	1.87’’	SAE 8
WT3-25XX-S	2.50”	2.875”	1.37”	8.00”	1.25”	0.76”	3.12”	0.75”	3.00”	0.81’’	2.06’’	SAE 8
WT3-30XX-S	3.00”	3.50”	1.50”	8.00”	1.50”	1.01”	2.56”	1.00”	3.50”	0.81’’	2.18’’	SAE 8
WT3-35XX-S	3.50”	4.00”	1.75”	8.00”	1.50”	1.01”	2.43”	1.00”	4.00”	0.81’’	2.18’’	SAE 8
WT3-40XX-S	4.00”	4.50”	2.00”	9.00”	2.00”	1.26”	2.43”	1.25”	4.50”	0.81’’	2.18’’	SAE 8

1. FOR 8" STROKE : A = 12.25" (2" TO 4" BORE
2. FOR 8" STROKE : E = 5.12" (2" TO 4" BORE)
MAXIMUM RETRACTED WORKING PRESSURE : 3000 PSI

*NPT PORTS ARE ALSO AVAIBLE
MAXIMUM RETRACTED WORKING PRESSURE : 3000 PSI
MAXIMUM EXTENDED WORKING PRESSURE : TABLE
RETRACTED AND STROKE TOLERANCE ± 1/8"

UTILITY CYLINDER THROUGH HOLE TYPE

PART NUMBER	BORE & STROKE	DIMENSIONS		ROD DIAMETER	PIN SIZE	PORTS*	COLUMN LOADS (LBS)	PRESSURE (PSI)	WEIGHT (LBS)
		RETRACTED	EXTENDED						
WT3-1504-S	1.5” X 4”	11”	15”				5300	3000	7
WT3-1506-S	1.5” X 6”	13”	19”				5300	3000	8
WT3-1508-S	1.5” X 8”	15”	23”				5300	3000	9
WT3-1510-S	1.5” X 10”	17”	27”	1”	5/8”	SAE 6	5300	3000	11
WT3-1512-S	1.5” X 12”	19”	31”				5300	3000	12
WT3-1514-S	1.5” X 14”	21”	35”				5300	3000	13
WT3-1516-S	1.5” X 16”	23”	39”				5300	3000	14
WT3-2004-S	2” X 4”	12”	16”				9400	3000	11
WT3-2006-S	2” X 6”	14”	20”				9400	3000	12
WT3-2008-S	2” X 8”	16”	24”				9400	3000	14
WT3-2010-S	2” X 10”	18”	28”				9400	3000	16
WT3-2012-S	2” X 12”	20”	32”				9400	3000	17
WT3-2014-S	2” X 14”	22”	36”				9400	3000	19
WT3-2016-S	2” X 16”	24”	40”				9400	3000	21
WT3-2018-S	2” X 18”	26”	44”				9400	3000	22
WT3-2020-S	2” X 20”	28”	48”				9400	3000	24
WT3-2024-S	2” X 24”	32”	56”	1-1/4”	3/4”	SAE 8	7300	2300	27
WT3-2028-S	2” X 28”	36”	64”				5600	1700	31
WT3-2030-S	2” X 30”	38”	68”				4900	1500	33
WT3-2032-S	2” X 32”	40”	72”				4400	1400	34
WT3-2036-S	2” X 36”	44”	80”				3500	1100	38
WT3-2040-S	2” X 40”	48”	88”				2900	900	41
WT3-2042-S	2” X 42”	50”	92”				2700	800	43
WT3-2048-S	2” X 48”	56”	104”				2100	600	48
WT3-2060-S	2” X 60”	68”	128”				1400	400	58
WT3-2072-S	2” X 72”	80”	152”				900	300	68

* NPT PORTS ARE ALSO AVAILABLE.
NOTE : COLUMN LOAD IS THE MAXIMUM PUSHING LOAD SUGGESTED USING A MINIMUM SAFETY FACTOR OF 2 AND BASED ON A PIN TO PIN MOUNTING CALCULATION.

HYDRO CUSTOM IS NOT RESPONSIBLE FOR INCORRECT RESULTS OBTAINED WITH FIGURES IN THIS DOCUMENT. INFORMATION IS FOR REFERENCE ONLY. NO OTHER CONDITIONS ARE EXPRESSED OR IMPLIED.

UTILITY CYLINDERS THROUGH HOLE TYPE • 3000 PSI WP

HC Hydro Custom

WELDED THROUGH HOLE TYPE									
PART NUMBER	BORE & STROKE	DIMENSIONS		ROD DIAMETER	PIN SIZE	PORTS*	COLUMN LOADS (LBS)	PRESSURE (PSI)	WEIGHT (LBS)
		RETRACTED	EXTENDED						
WT3-3006	3" X 6"	14"	20"	1-1/2"	1"	SAE 8	21200	3000	21
WT3-3008	3" X 8"	16"	24"				21200	3000	24
WT3-3010	3" X 10"	18"	28"				21200	3000	26
WT3-3012	3" X 12"	20"	32"				21200	3000	28
WT3-3014	3" X 14"	22"	36"				21200	3000	31
WT3-3016	3" X 16"	24"	40"				21200	3000	33
WT3-3018	3" X 18"	26"	44"				21200	3000	36
WT3-3020	3" X 20"	28"	48"				20700	2900	38
WT3-3024	3" X 24"	32"	56"				15200	2100	43
WT3-3028	3" X 28"	36"	64"				11600	1600	48
WT3-3030	3" X 30"	38"	68"				10300	1400	51
WT3-3032	3" X 32"	40"	72"				9200	1300	53
WT3-3036	3" X 36"	44"	80"				7400	1000	58
WT3-3040	3" X 40"	48"	88"				6100	800	63
WT3-3042	3" X 42"	50"	92"				5600	700	65
WT3-3048	3" X 48"	56"	104"				4400	600	73
WT3-3060	3" X 60"	68"	128"				2900	400	87
WT3-3504	3.5" X 4"	12"	16"	1-3/4"	1"	SAE 8	28800	3000	24
WT3-3506	3.5" X 6"	14"	20"				28800	3000	27
WT3-3508	3.5" X 8"	16"	24"				28800	3000	30
WT3-3510	3.5" X 10"	18"	28"				28800	3000	33
WT3-3512	3.5" X 12"	20"	32"				28800	3000	36
WT3-3514	3.5" X 14"	22"	36"				28800	3000	39
WT3-3516	3.5" X 16"	24"	40"				28800	3000	42
WT3-3518	3.5" X 18"	26"	44"				28800	3000	45
WT3-3520	3.5" X 20"	28"	48"				28800	3000	48
WT3-3524	3.5" X 24"	32"	56"				28100	2900	54
WT3-3528	3.5" X 28"	36"	64"				21500	2200	60
WT3-3530	3.5" X 30"	38"	68"				19100	1900	63
WT3-3532	3.5" X 32"	40"	72"				17000	1700	66
WT3-3536	3.5" X 36"	44"	80"				13800	1400	72
WT3-3540	3.5" X 40"	48"	88"				11400	1100	79
WT3-3542	3.5" X 42"	50"	92"				10400	1000	82
WT3-3548	3.5" X 48"	56"	104"				8100	800	91

* NPT PORTS ARE ALSO AVAILABLE.
NOTE : COLUMN LOAD IS THE MAXIMUM PUSHING LOAD SUGGESTED USING A MINIMUM SAFETY FACTOR OF 2 AND BASED ON A PIN TO PIN MOUNTING CALCULATION.

HYDRO CUSTOM IS NOT RESPONSIBLE FOR INCORRECT RESULTS OBTAINED WITH FIGURES IN THIS DOCUMENT. INFORMATION IS FOR REFERENCE ONLY. NO OTHER CONDITIONS ARE EXPRESSED OR IMPLIED.

WELDED THROUGH HOLE TYPE									
PART NUMBER	BORE & STROKE	DIMENSIONS		ROD DIAMETER	PIN SIZE	PORTS*	COLUMN LOADS (LBS)	PRESSURE (PSI)	WEIGHT (LBS)
		RETRACTED	EXTENDED						
WT3-4008	4" X 8"	17"	25"				37700	3000	40
WT3-4010	4" X 10"	19"	29"				37700	3000	44
WT3-4012	4" X 12"	21"	33"				37700	3000	47
WT3-4014	4" X 14"	23"	37"				37700	3000	51
WT3-4016	4" X 16"	25"	41"				37700	3000	55
WT3-4018	4" X 18"	27"	45"				37700	3000	58
WT3-4020	4" X 20"	29"	49"				37700	3000	62
WT3-4024	4" X 24"	33"	57"	2"	1-1/4"	SAE 8	37700	3000	70
WT3-4028	4" X 28"	37"	65"				35600	2800	77
WT3-4030	4" X 30"	39"	69"				31600	2500	81
WT3-4032	4" X 32"	41"	73"				28300	2200	84
WT3-4036	4" X 36"	45"	81"				22900	1800	91
WT3-4040	4" X 40"	49"	89"				19000	1500	99
WT3-4048	4" X 48"	57"	105"				13600	1000	114
WT3-4060	4" X 60"	69"	129"				9000	700	136

* NPT PORTS ARE ALSO AVAILABLE.
NOTE : COLUMN LOAD IS THE MAXIMUM PUSHING LOAD SUGGESTED USING A MINIMUM SAFETY FACTOR OF 2 AND BASED ON A PIN TO PIN MOUNTING CALCULATION.

HYDRO CUSTOM IS NOT RESPONSIBLE FOR INCORRECT RESULTS OBTAINED WITH FIGURES IN THIS DOCUMENT. INFORMATION IS FOR REFERENCE ONLY.
NO OTHER CONDITIONS ARE EXPRESSED OR IMPLIED.

UTILITY CYLINDERS THROUGH HOLE TYPE • 3000 PSI WP

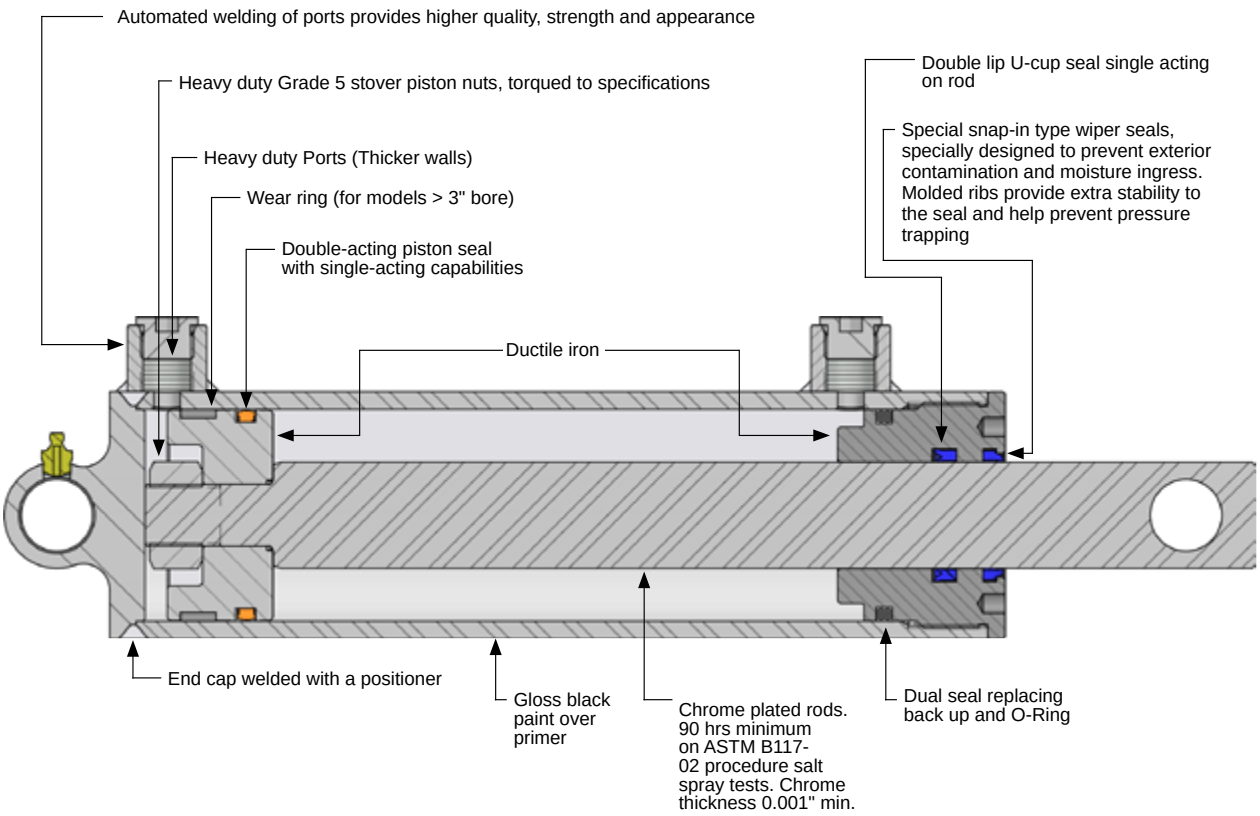

SEAL TEMPERATURE RANGE : -30°C / +100°C (-22°F / +212°F)
SEAL MAXIMUM SPEED : 3 FT / SEC

- All seals are top grade/first quality North American made
- All components are cnc machined for higher accuracy and conformity
- Quality controlled in China by qualified Canadian technicians
- 100% Tested. All cylinders are submitted to static and dynamic pressure tests to recommended specifications

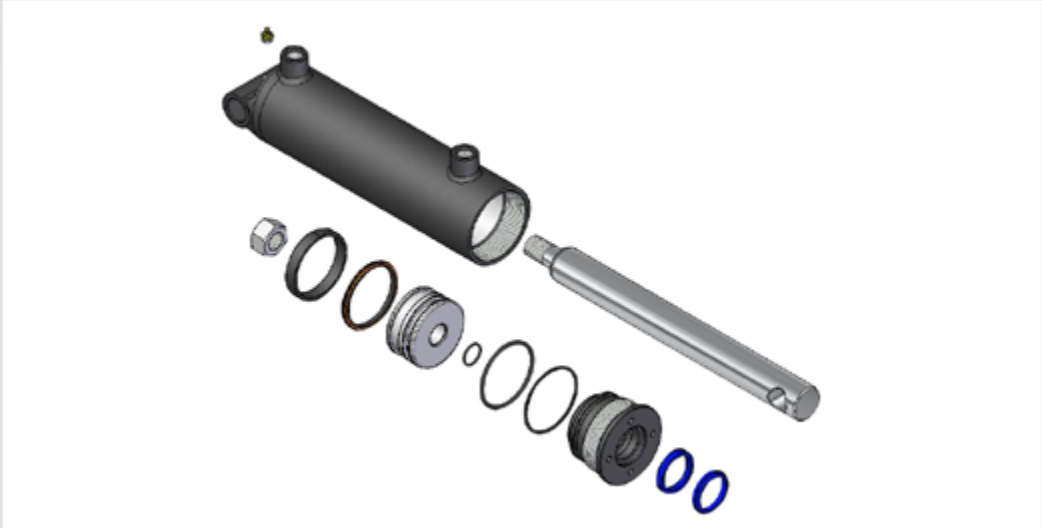

HYDRO CUSTOM IS NOT RESPONSIBLE FOR INCORRECT RESULTS OBTAINED WITH FIGURES IN THIS DOCUMENT. INFORMATION IS FOR REFERENCE ONLY. NO OTHER CONDITIONS ARE EXPRESSED OR IMPLIED.

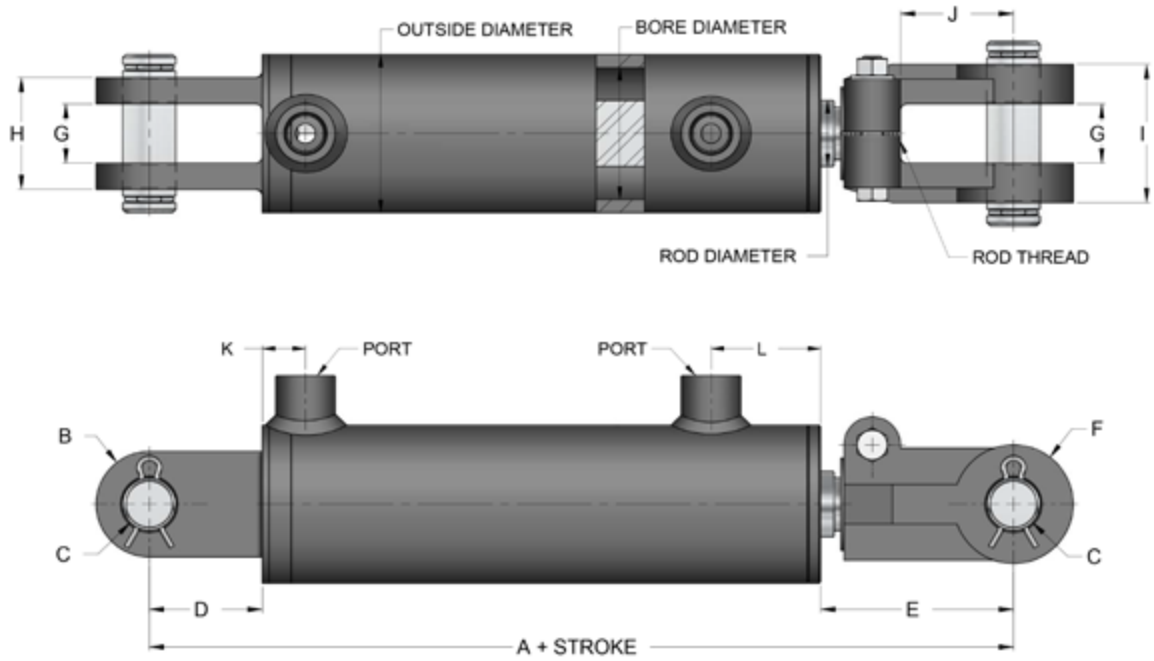

PART NUMBER	CYLINDER BORE	OUTSIDE DIAMETER	ROD DIAMETER	ROD THREAD	*A	B	C	D	*E	F	G	H	I	J	K	L	PORTS*
TCL15	1.50"	2.00"	1.00"	0.875-14 UNF	10.25"	1.50"	0.76"	1.62"	4.50"	1.87"	0.87"	1.75"	2.00"	1.62"	0.93"	1.87"	SAE 6
TCL20	2.00"	2.50"	1.12"	1.125-12 UNF	10.25"	2.00"	1.01"	2.12"	3.62"	2.25"	1.12"	2.12"	2.62"	2.12"	0.81"	2.06"	SAE 8
TCL25	2.50"	3.00"	1.25"	1.125-12 UNF	10.25"	2.00"	1.01"	2.12"	3.62"	2.25"	1.12"	2.12"	2.62"	2.12"	0.81"	2.06"	SAE 8
TCL30	3.00"	3.50"	1.50"	1.250-12 UNF	10.25"	2.00"	1.01"	1.87"	3.62"	2.25"	1.12"	2.62"	2.62"	2.12"	0.87"	2.18"	SAE 8
TCL35	3.50"	4.00"	1.75"	1.500-12 UNF	10.25"	2.00"	1.01"	1.87"	3.62"	2.50"	1.12"	2.62"	2.75"	2.12"	0.93"	2.18"	SAE 8
TCL40	4.00"	4.50"	2.00"	1.500-12 UNF	10.25"	2.25"	1.01"	1.75"	3.62"	2.50"	1.12"	2.62"	2.75"	2.12"	1.00"	2.18"	SAE 8

1. FOR 8.00" STROKE : A = 12.25"
2. FOR 8.00" STROKE : E = 6.50" (1.50" BORE) E = 5.62" (2.00" TO 4.00" BORE)
DIMENSIONS A AND E ARE FOR REFERENCES ONLY AS CLEVIS IS ADJUSTABLE
* NPT PORTS ARE ALSO AVAILABLE
MAXIMUM RETRACTED WORKING PRESSURE : 3000 PSI
MAXIMUM EXTENDED WORKING PRESSURE : SEE TABLE
RETRACTED AND STROKE TOLERANCE ± 1/8"

HYDRO CUSTOM IS NOT RESPONSIBLE FOR INCORRECT RESULTS OBTAINED WITH FIGURES IN THIS DOCUMENT. INFORMATION IS FOR REFERENCE ONLY. NO OTHER CONDITIONS ARE EXPRESSED OR IMPLIED.

ADJUSTABLE FEMALE CLEVIS TYPE • 3000 PSI WP

ADJUSTABLE FEMALE CLEVIS TYPE									
PART NUMBER	BORE & STROKE	DIMENSIONS		ROD DIAMETER	PIN SIZE	PORTS*	COLUMN LOAD (LBS)	PRESSURE (PSI)	WEIGHT (LBS)
		RETRACTED	EXTENDED						
TCL1504	1.5" X 4"	14-1/4"	18-1/4"	1"	3/4"	SAE 6	5300	3000	10
TCL1506	1.5" X 6"	16-1/4"	22-1/4"				5300	3000	11
TCL1508	1.5" X 8"	18-1/4"	26-1/4"				5300	3000	12
TCL1508-ASAE*	1.5" X 8"	20-1/4"	28-1/4"				5300	3000	13
TCL1510	1.5" X 10"	20-1/4"	30-1/4"				5300	3000	13
TCL1512	1.5" X 12"	22-1/4"	34-1/4"				5300	3000	15
TCL1514	1.5" X 14"	24-1/4"	38-1/4"				5300	3000	16
TCL1516	1.5" X 16"	26-1/4"	42-1/4"				5200	2900	17
TCL1518	1.5" X 18"	28-1/4"	46-1/4"				4400	2400	18
TCL1520	1.5" X 20"	30-1/4"	50-1/4"				3700	2100	20
TCL1524	1.5" X 24"	34-1/4"	58-1/4"				2700	1500	22
TCL1528	1.5" X 28"	38-1/4"	66-1/4"				2100	1200	25
TCL1530	1.5" X 30"	40-1/4"	70-1/4"				1900	1000	26
TCL1532	1.5" X 32"	42-1/4"	74-1/4"				1700	900	27
TCL1534	1.5" X 34"	44-1/4"	78-1/4"				1500	800	28
TCL1536	1.5" X 36"	46-1/4"	82-1/4"				1300	700	29
TCL2004	2" X 4"	14-1/4"	18-1/4"	1-1/8"	1"	SAE 8	9400	3000	16
TCL2006	2" X 6"	16-1/4"	22-1/4"				9400	3000	17
TCL2008	2" X 8"	18-1/4"	26-1/4"				9400	3000	19
TCL2008-ASAE*	2" X 8"	20-1/4"	28-1/4"				9400	3000	19
TCL2010	2" X 10"	20-1/4"	30-1/4"				9400	3000	20
TCL2012	2" X 12"	22-1/4"	34-1/4"				9400	3000	22
TCL2014	2" X 14"	24-1/4"	38-1/4"				9400	3000	23
TCL2016	2" X 16"	26-1/4"	42-1/4"				8400	2600	25
TCL2018	2" X 18"	28-1/4"	46-1/4"				7000	2200	27
TCL2020	2" X 20"	30-1/4"	50-1/4"				5900	1900	28
TCL2024	2" X 24"	34-1/4"	58-1/4"				4400	1400	31
TCL2030	2" X 30"	40-1/4"	70-1/4"				3000	900	36
TCL2036	2" X 36"	46-1/4"	82-1/4"				2200	700	41
TCL2504	2.5" X 4"	14-1/4"	18-1/4"	1-1/4"	1"	SAE 8	14700	3000	19
TCL2506	2.5" X 6"	16-1/4"	22-1/4"				14700	3000	20
TCL2508	2.5" X 8"	18-1/4"	26-1/4"				14700	3000	22
TCL2508-ASAE*	2.5" X 8"	20-1/4"	28-1/4"				14700	3000	23
TCL2510	2.5" X 10"	20-1/4"	30-1/4"				14700	3000	24
TCL2512	2.5" X 12"	22-1/4"	34-1/4"				14700	3000	26
TCL2514	2.5" X 14"	24-1/4"	38-1/4"				14700	3000	28
TCL2516	2.5" X 16"	26-1/4"	42-1/4"				12800	2600	30
TCL2518	2.5" X 18"	28-1/4"	46-1/4"				10700	2100	32
TCL2520	2.5" X 20"	30-1/4"	50-1/4"				9100	1800	34
TCL2524	2.5" X 24"	34-1/4"	58-1/4"				6700	1300	38
TCL2530	2.5" X 30"	40-1/4"	70-1/4"				4600	900	44
TCL2536	2.5" X 36"	46-1/4"	82-1/4"				3400	600	49

* ASAE = AMERICAN SOCIETY OF AGRICULTURE ENGINEERS
DESIGNATES AN INDUSTRY MOUNTING STANDARD FOR 8" AND 16" STROKE CYLINDERS

HYDRO CUSTOM IS NOT RESPONSIBLE FOR INCORRECT RESULTS OBTAINED WITH FIGURES IN THIS DOCUMENT. INFORMATION IS FOR REFERENCE ONLY. NO OTHER CONDITIONS ARE EXPRESSED OR IMPLIED.

ADJUSTABLE FEMALE CLEVIS TYPE									
PART NUMBER	BORE & STROKE	DIMENSIONS		ROD DIAMETER	PIN SIZE	PORTS*	COLUMN LOAD (LBS)	PRESSURE (PSI)	WEIGHT (LBS)
		RETRACTED	EXTENDED						
TCL3004	3" X 4"	14-1/4"	18-1/4"				21200	3000	24
TCL3006	3" X 6"	16-1/4"	22-1/4"				21200	3000	26
TCL3008	3" X 8"	18-1/4"	26-1/4"				21200	3000	29
TCL3008-ASAE*	3" X 8"	20-1/4"	28-1/4"				21200	3000	29
TCL3010	3" X 10"	20-1/4"	30-1/4"				21200	3000	31
TCL3012	3" X 12"	22-1/4"	34-1/4"				21200	3000	33
TCL3014	3" X 14"	24-1/4"	38-1/4"	1-1/2"	1"	SAE 8	21200	3000	36
TCL3016	3" X 16"	26-1/4"	42-1/4"				21200	3000	38
TCL3018	3" X 18"	28-1/4"	46-1/4"				21200	3000	41
TCL3020	3" X 20"	30-1/4"	50-1/4"				18800	2600	43
TCL3024	3" X 24"	34-1/4"	58-1/4"				14000	1900	48
TCL3030	3" X 30"	40-1/4"	70-1/4"				9600	1300	56
TCL3036	3" X 36"	46-1/4"	82-1/4"				7000	900	63
TCL3504	3.5" X 4"	14-1/4"	18-1/4"				28800	3000	29
TCL3506	3.5" X 6"	16-1/4"	22-1/4"				28800	3000	32
TCL3508	3.5" X 8"	18-1/4"	26-1/4"				28800	3000	35
TCL3508-ASAE*	3.5" X 8"	20-1/4"	28-1/4"				28800	3000	36
TCL3510	3.5" X 10"	20-1/4"	30-1/4"				28800	3000	38
TCL3512	3.5" X 12"	22-1/4"	34-1/4"				28800	3000	41
TCL3514	3.5" X 14"	24-1/4"	38-1/4"	1-3/4"	1"	SAE 8	28800	3000	44
TCL3516	3.5" X 16"	26-1/4"	42-1/4"				28800	3000	47
TCL3518	3.5" X 18"	28-1/4"	46-1/4"				28800	3000	50
TCL3520	3.5" X 20"	30-1/4"	50-1/4"				28800	3000	53
TCL3524	3.5" X 24"	34-1/4"	58-1/4"				26000	2700	59
TCL3530	3.5" X 30"	40-1/4"	70-1/4"				17900	1800	68
TCL3536	3.5" X 36"	46-1/4"	82-1/4"				13000	1300	77
TCL4004	4" X 4"	14-1/4"	18-1/4"				37600	3000	35
TCL4006	4" X 6"	16-1/4"	22-1/4"				37600	3000	38
TCL4008	4" X 8"	18-1/4"	26-1/4"				37600	3000	42
TCL4008-ASAE*	4" X 8"	20-1/4"	28-1/4"				37600	3000	43
TCL4010	4" X 10"	20-1/4"	30-1/4"				37600	3000	46
TCL4012	4" X 12"	22-1/4"	34-1/4"				37600	3000	49
TCL4014	4" X 14"	24-1/4"	38-1/4"	2"	1"	SAE 8	37600	3000	53
TCL4016	4" X 16"	26-1/4"	42-1/4"				37600	3000	57
TCL4018	4" X 18"	28-1/4"	46-1/4"				37600	3000	60
TCL4020	4" X 20"	30-1/4"	50-1/4"				37600	3000	64
TCL4024	4" X 24"	34-1/4"	58-1/4"				37600	3000	71
TCL4030	4" X 30"	40-1/4"	70-1/4"				30500	2400	82
TCL4036	4" X 36"	46-1/4"	82-1/4"				22200	1700	93

* NPT PORTS ARE ALSO AVAILABLE.
NOTE : COLUMN LOAD IS THE MAXIMUM PUSHING LOAD SUGGESTED USING A MINIMUM SAFETY FACTOR OF 2 AND BASED ON A PIN TO PIN MOUNTING CALCULATION.

* ASAE = AMERICAN SOCIETY OF AGRICULTURE ENGINEERS
DESIGNATES AN INDUSTRY MOUNTING STANDARD FOR 8" AND 16" STROKE CYLINDERS

HYDRO CUSTOM IS NOT RESPONSIBLE FOR INCORRECT RESULTS OBTAINED WITH FIGURES IN THIS DOCUMENT. INFORMATION IS FOR REFERENCE ONLY. NO OTHER CONDITIONS ARE EXPRESSED OR IMPLIED.

ADJUSTABLE FEMALE CLEVIS TYPE • 3000 PSI WP

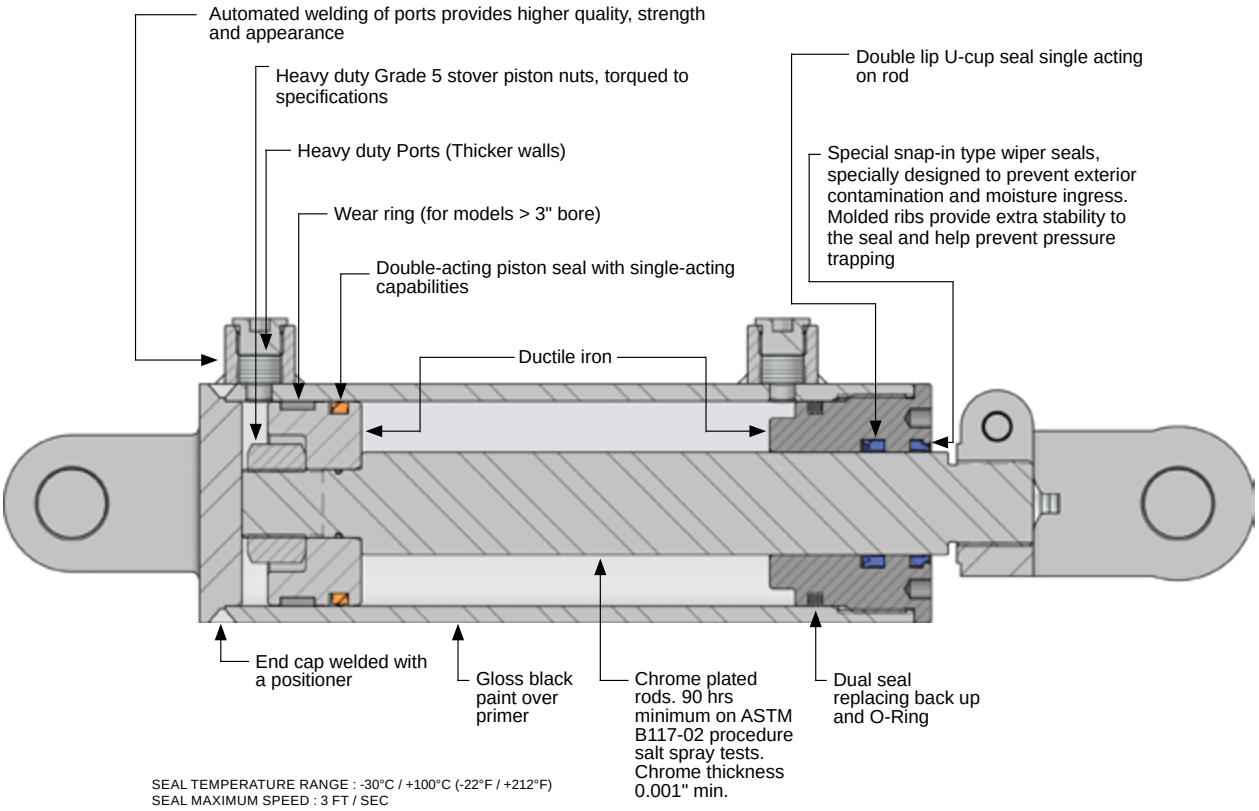

SEAL TEMPERATURE RANGE : -30°C / +100°C (-22°F / +212°F)
SEAL MAXIMUM SPEED : 3 FT / SEC

- All seals are top grade/first quality North American made
- All components are cnc machined for higher accuracy and conformity
- Quality controlled in China by qualified Canadian technicians
- 100% Tested. All cylinders are submitted to static and dynamic pressure tests to recommended specifications

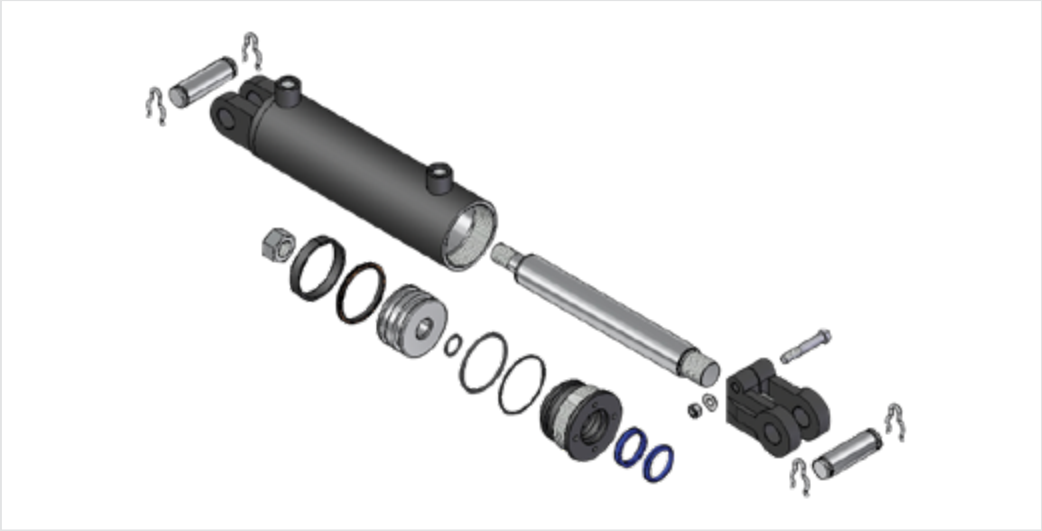

HYDRO CUSTOM IS NOT RESPONSIBLE FOR INCORRECT RESULTS OBTAINED WITH FIGURES IN THIS DOCUMENT. INFORMATION IS FOR REFERENCE ONLY. NO OTHER CONDITIONS ARE EXPRESSED OR IMPLIED.

NEW CUSTOM
TR2.5-XXXX-LA4
(BORE & STROKE)

NEW!
TWO-IN-ONE PORT INTEGRATION
Save time & money

Why double your inventory, when a single cylinder can meet all your needs ?

With integrated
SAE (O-ring) & **NPT** ports
The all-in-one solution !

TR2.5-HYD-EN-1605

working together for better solutions

HC Hydro Custom

HYDRAULIC TIE - ROD CYLINDERS - 2500 PSI WP

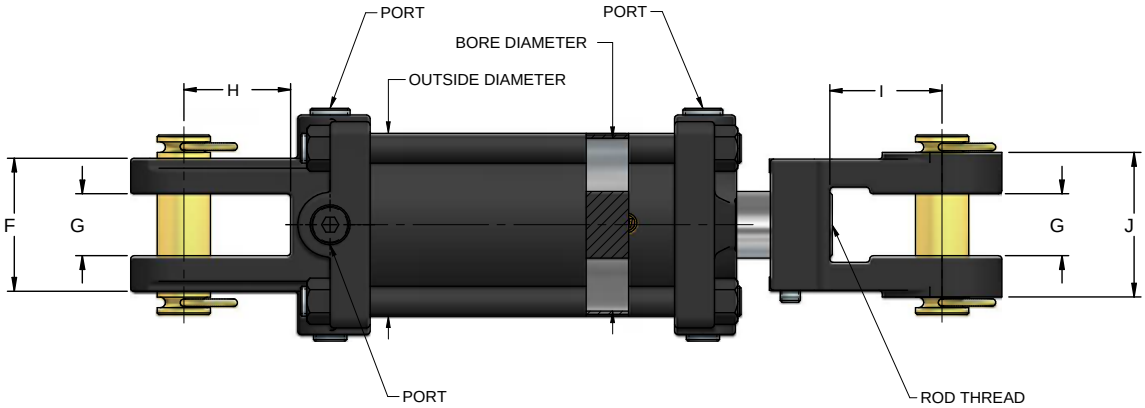

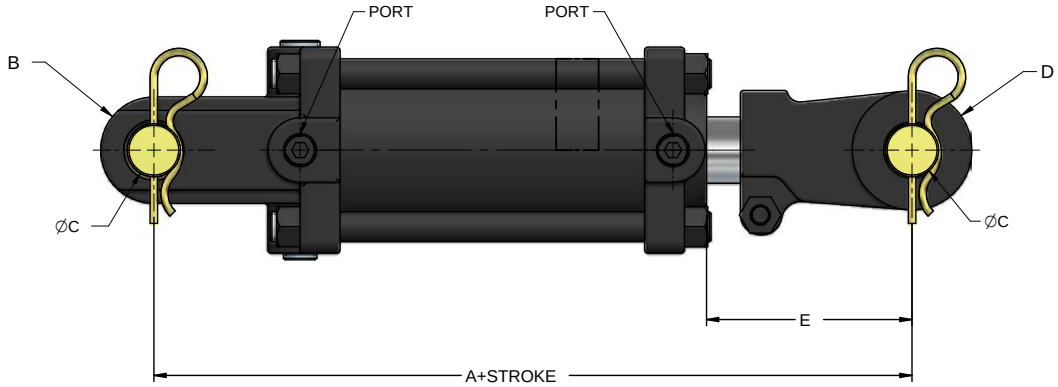

PART NUMBER	CYLINDER BORE	OUTSIDE DIAMETER	ROD THREAD1	A2	B	C3	D4	E5	F	G	H	I	J4	PORTS
TR2.5-20-LA4	2.00"	2.38"	1.125-12 UNF	10.25"	2.00"	1.01"	2.00"	4.17"	2.44"	1.14"	2.00"	2.12"	2.50"	3/8 NPT & SAE 8
TR2.5-25-LA4	2.50"	2.89"	1.125-12 UNF	10.25"	2.00"	1.01"	2.00"	4.17"	2.44"	1.14"	2.00"	2.12"	2.50"	3/8 NPT & SAE 8
TR2.5-30-LA4	3.00"	3.39"	1.25-12 UNF	10.25"	2.00"	1.01"	2.00"	4.14"	2.72"	1.14"	2.00"	2.12"	2.72"	1/2 NPT & SAE 8
TR2.5-35-LA4	3.50"	3.87"	1.25-12 UNF	10.25"	2.00"	1.01"	2.00"	4.09"	2.72"	1.14"	2.00"	2.12"	2.72"	1/2 NPT & SAE 8
TR2.5-40-LA4	4.00"	4.50"	1.25-12 UNF	10.25"	2.00"	1.01"	2.00"	3.82"	2.72"	1.14"	2.12"	2.12"	2.72"	1/2 NPT & SAE 8
TR2.5-50-LA4	5.00"	5.50"	1.500-12 UNF	12.25"	2.75"	1.26"	2.75"	5.00"	2.87"	1.25"	2.12"	2.12"	2.95"	1/2 NPT & SAE 10

1. FOR TR2.5-2518 TO TR2.5-2536: ROD THREAD= 1.250-12 UNF
2. FOR 8.00" ASAE STROKE: A= 12.25"
FOR 16.00" ASAE STROKE: A= 15.50"
3. FOR 16.00" ASAE STROKE: C= 1.26"
4. FOR TR2.5-4016-ASAE TO TR2.5-4036: D= 2.50" J=2.75" ROD THREAD= 1.500-12 UNF
5. FOR 8.00" ASAE STROKE: E= 5.75" (2.00" TO 3.00" BORE) E=5.62" (3.50" BORE) E=5.56" (4.00" BORE)
FOR 16.00" ASAE STROKE: E= 9.00" (2.00" TO 3.00" BORE) E=8.87" (3.50" BORE) E=8.81" (4.00" BORE)

MAXIMUM RETRACTED WORKING PRESSURE= 2500 psi
MAXIMUM EXTENDED WORKING PRESSURE= SEE TABLE
FOR ALL CYLINDER, RETRACTED TOLERANCE ± 1/8"

HYDRO CUSTOM IS NOT RESPONSIBLE FOR INCORRECT RESULTS OBTAINED WITH FIGURES IN THIS DOCUMENT. INFORMATION IS FOR REFERENCE ONLY. NO OTHER CONDITIONS ARE EXPRESSED OR IMPLIED.

AGRICULTURAL									
PART NUMBER	BORE & STROKE	DIMENSIONS		ROD DIAMETER	PIN SIZE	PORTS	COLUMN LOADS (LBS)	PRESSURE (PSI)	WEIGHT (LBS)
		RETRACTED	EXTENDED						
TR2.5-2004-LA4	2" X 4"	14 1/4"	18 1/4"	1-1/8"	1"	SAE 6 & 3/8 NPT	7800	2500	16
TR2.5-2006-LA4	2" X 6"	16 1/4"	22 1/4"				7800	2500	17
TR2.5-2008-LA4	2" X 8"	18 1/4"	26 1/4"				7800	2500	19
TR2.5-2008-ASAE-LA4*	2" X 8"	20 1/4"	28 1/4"				7800	2500	20
TR2.5-2010-LA4	2" X 10"	20 1/4"	30 1/4"				7800	2500	20
TR2.5-2012-LA4	2" X 12"	22 1/4"	34 1/4"				7800	2500	22
TR2.5-2014-LA4	2" X 14"	24 1/4"	38 1/4"				7800	2500	24
TR2.5-2016-LA4	2" X 16"	26 1/4"	42 1/4"				7800	2500	25
TR2.5-2018-LA4	2" X 18"	28 1/4"	46 1/4"				7000	2200	27
TR2.5-2020-LA4	2" X 20"	30 1/4"	50 1/4"				5900	1900	28
TR2.5-2024-LA4	2" X 24"	34 1/4"	58 1/4"				4400	1400	31
TR2.5-2030-LA4	2" X 30"	40 1/4"	70 1/4"				3000	900	36
TR2.5-2036-LA4	2" X 36"	46 1/4"	82 1/4"				2200	700	41
TR2.5-2040-LA4	2″ X 40"	50 1/4"	90 1/4"				1700	500	44
TR2.5-2048-LA4	2″ X 48"	58 1/4"	106 1/4"				1300	400	49
TR2.5-2504-LA4	2.5" X 4"	14 1/4"	18 1/4"	1-1/8"	1"	SAE 6 & 3/8 NPT	12200	2500	19
TR2.5-2506-LA4	2.5" X 6"	16 1/4"	22 1/4"				12200	2500	21
TR2.5-2508-LA4	2.5" X 8"	18 1/4"	26 1/4"				12200	2500	22
TR2.5-2508-ASAE-LA4*	2.5" X 8"	20 1/4"	28 1/4"				12200	2500	23
TR2.5-2510-LA4	2.5" X 10"	20 1/4"	30 1/4"				12200	2500	24
TR2.5-2512-LA4	2.5" X 12"	22 1/4"	34 1/4"				12200	2500	26
TR2.5-2514-LA4	2.5" X 14"	24 1/4"	38 1/4"				10300	2100	28
TR2.5-2516-LA4	2.5" X 16"	26 1/4"	42 1/4"				8400	1700	29
TR2.5-2518-LA4	2.5" X 18"	28 1/4"	46 1/4"				7000	1400	32
TR2.5-2520-LA4	2.5" X 20"	30 1/4"	50 1/4"				5900	1200	34
TR2.5-2524-LA4	2.5" X 24"	34 1/4"	58 1/4"				4400	900	38
TR2.5-2530-LA4	2.5" X 30"	40 1/4"	70 1/4"	1-1/4"			4400	900	43
TR2.5-2536-LA4	2.5" X 36"	46 1/4"	82 1/4"				3400	600	49
TR2.5-2540-LA4	2.5" X 40"	50 1/4"	90 1/4"				2700	500	54
TR2.5-2548-LA4	2.5" X 48"	58 1/4"	106 1/4"				2000	400	60
TR2.5-3004-LA4	3" X 4"	14 1/4"	18 1/4"	1-1/4"	1"	SAE 8 & 1/2 NPT	17600	2500	24
TR2.5-3006-LA4	3" X 6"	16 1/4"	22 1/4"				17600	2500	26
TR2.5-3008-LA4	3" X 8"	18 1/4"	26 1/4"				17600	2500	28
TR2.5-3008-ASAE-LA4*	3" X 8"	20 1/4"	28 1/4"				17600	2500	29
TR2.5-3010-LA4	3" X 10"	20 1/4"	30 1/4"				17600	2500	30
TR2.5-3012-LA4	3" X 12"	22 1/4"	34 1/4"				17600	2500	33
TR2.5-3014-LA4	3" X 14"	24 1/4"	38 1/4"				15700	2200	35
TR2.5-3016-LA4	3" X 16"	26 1/4"	42 1/4"				12800	1800	37
TR2.5-3016-ASAE-LA4*	3" X 16"	31 1/2"	47 1/2"	1-1/2"	1-1/4"		9200	1300	42
TR2.5-3018-LA4	3" X 18"	28 1/4"	46 1/4"	1-1/4"	1"		11300	1600	42
TR2.5-3020-LA4	3" X 20"	30 1/4"	50 1/4"				9200	1300	44
TR2.5-3024-LA4	3" X 24"	34 1/4"	58 1/4"				6700	900	49
TR2.5-3030-LA4	3" X 30"	40 1/4"	70 1/4"	1-1/2"			9600	1300	57
TR2.5-3036-LA4	3" X 36"	46 1/4"	82 1/4"				7000	900	65
TR2.5-3040-LA4	3" X 40"	50 1/4"	90 1/4"				5700	800	70
TR2.5-3048-LA4	3" X 48"	58 1/4"	106 1/4"				3900	500	80

NOTE : COLUMN LOAD IS THE MAXIMUM PUSHING LOAD SUGGESTED USING A MINIMUM SAFETY FACTOR OF 2 AND BASED ON A PIN TO PIN MOUNTING CALCULATION.

* ASAE = AMERICAN SOCIETY OF AGRICULTURE ENGINEERS
DESIGNATES AN INDUSTRY MOUNTING STANDARD FOR 8" AND 16" STROKE CYLINDERS

HYDRO CUSTOM IS NOT RESPONSIBLE FOR INCORRECT RESULTS OBTAINED WITH FIGURES IN THIS DOCUMENT. INFORMATION IS FOR REFERENCE ONLY. NO OTHER CONDITIONS ARE EXPRESSED OR IMPLIED.

HYDRAULIC TIE - ROD CYLINDERS - 2500 PSI WP

AGRICULTURAL									
PART NUMBER	BORE & STROKE	DIMENSIONS		ROD DIAMETER	PIN SIZE	PORTS	COLUMN LOADS (LBS)	PRESSURE (PSI)	WEIGHT (LBS)
		RETRACTED	EXTENDED						
TR2.5-3504-LA4	3.5" X 4"	14 1/4"	18 1/4"	1 1/4"	1"	SAE 8 & 1/2 NPT	24000	2500	29
TR2.5-3506-LA4	3.5" X 6"	16 1/4"	22 1/4"				24000	2500	32
TR2.5-3508-LA4	3.5" X 8"	18 1/4"	26 1/4"				24000	2500	34
TR2.5-3508-ASAE-LA4*	3.5" X 8"	20 1/4"	28 1/4"				24000	2500	35
TR2.5-3510-LA4	3.5" X 10"	20 1/4"	30 1/4"				24000	2500	37
TR2.5-3512-LA4	3.5" X 12"	22 1/4"	34 1/4"				19600	2000	39
TR2.5-3514-LA4	3.5" X 14"	24 1/4"	38 1/4"				15700	1600	42
TR2.5-3516-LA4	3.5" X 16"	26 1/4"	42 1/4"				12800	1300	44
TR2.5-3516-ASAE-LA4*	3.5" X 16"	31 1/2"	47 1/2"	1 1/2"	1 1/4"		21100	2100	50
TR2.5-3518-LA4	3.5" X 18"	28 1/4"	46 1/4"	1 1/4"	1"		10700	1100	47
TR2.5-3520-LA4	3.5" X 20"	30 1/4"	50 1/4"				9100	900	49
TR2.5-3524-LA4	3.5" X 24"	34 1/4"	58 1/4"	1 1/2"			14000	1400	58
TR2.5-3530-LA4	3.5" X 30"	40 1/4"	70 1/4"				9600	1000	66
TR2.5-3536-LA4	3.5" X 36"	46 1/4"	82 1/4"				7000	700	74
TR2.5-3540-LA4	3.5" X 40"	50 1/4"	90 1/4"				5800	600	80
TR2.5-3548-LA4	3.5" X 48"	58 1/4"	1061/4"				3900	400	91
TR2.5-4004-LA4	4" X 4"	14 1/4"	18 1/4"	1 1/2"	1"	SAE 8 & 1/2 NPT	31400	2500	33
TR2.5-4006-LA4	4" X 6"	16 1/4"	22 1/4"				31400	2500	36
TR2.5-4008-LA4	4" X 8"	18 1/4"	26 1/4"				31400	2500	38
TR2.5-4008-ASAE-LA4*	4" X 8"	20 1/4"	28 1/4"				31400	2500	39
TR2.5-4010-LA4	4" X 10"	20 1/4"	30 1/4"				31400	2500	41
TR2.5-4012-LA4	4" X 12"	22 1/4"	34 1/4"				31400	2500	44
TR2.5-4014-LA4	4" X 14"	24 1/4"	38 1/4"				31400	2500	46
TR2.5-4016-LA4	4" X 16"	26 1/4"	42 1/4"				26700	2100	49
TR2.5-4016-ASAE-LA4*	4" X 16"	31 1/2"	47 1/2"	2"	1 1/4"		31400	2500	63
TR2.5-4018-LA4	4" X 18"	28 1/4"	46 1/4"	1 1/2"	1"		22300	1700	55
TR2.5-4020-LA4	4" X 20"	30 1/4"	50 1/4"				18800	1500	58
TR2.5-4024-LA4	4" X 24"	34 1/4"	58 1/4"				14000	1100	64
TR2.5-4024-175-LA4	4" X 24"	34 1/4"	58 1/4"	1 3/4"			26000	2050	68
TR2.5-4024-200-LA4	4" X 24"	34 1/4"	58 1/4"	2"			31400	2500	73
TR2.5-4030-LA4	4" X 30"	40 1/4"	70 1/4"				30500	2400	84
TR2.5-4036-LA4	4" X 36"	46 1/4"	82 1/4"				22200	1700	95
TR2.5-4040-LA4	4" X 40"	50 1/4"	90 1/4"				18200	1400	103
TR2.5-4048-LA4	4" X 48"	58 1/4"	106 1/4"				13200	1000	118

NOTE : COLUMN LOAD IS THE MAXIMUM PUSHING LOAD SUGGESTED USING A MINIMUM SAFETY FACTOR OF 2 AND BASED ON A PIN TO PIN MOUNTING CALCULATION.

* ASAE = AMERICAN SOCIETY OF AGRICULTURE ENGINEERS
DESIGNATES AN INDUSTRY MOUNTING STANDARD FOR 8" AND 16" STROKE CYLINDERS

HYDRO CUSTOM IS NOT RESPONSIBLE FOR INCORRECT RESULTS OBTAINED WITH FIGURES IN THIS DOCUMENT. INFORMATION IS FOR REFERENCE ONLY. NO OTHER CONDITIONS ARE EXPRESSED OR IMPLIED.

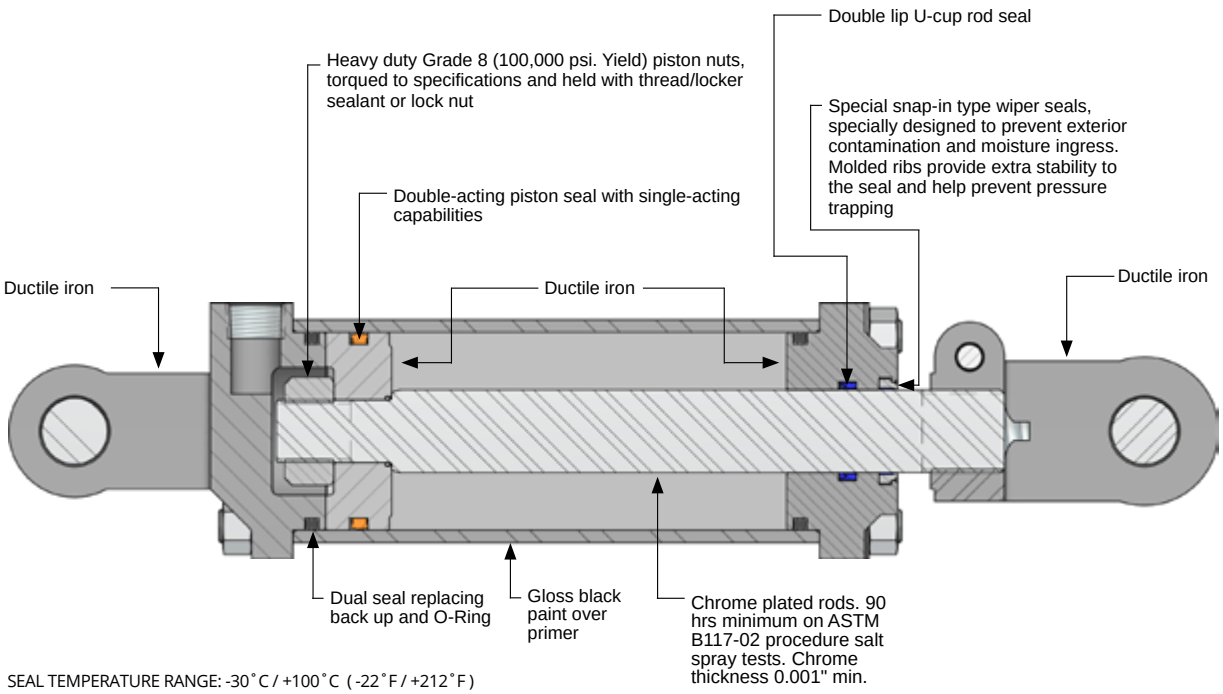

SEAL TEMPERATURE RANGE: -30˚C / +100˚C (-22˚F / +212˚F)
SEAL MAXIMUM SPEED: 3 FT / SEC

- All seals are top grade/first quality North American made
- All components are cnc machined for higher accuracy and conformity
- Quality controlled in China by qualified Canadian technicians
- 100% Tested. All cylinders are submitted to static and dynamic pressure tests to recommended specifications

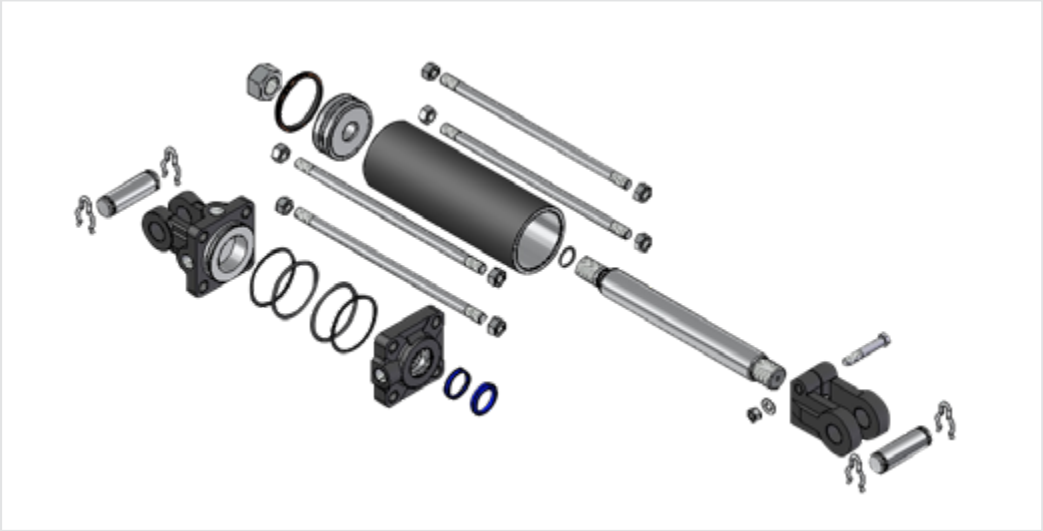

HYDRO CUSTOM IS NOT RESPONSIBLE FOR INCORRECT RESULTS OBTAINED WITH FIGURES IN THIS DOCUMENT. INFORMATION IS FOR REFERENCE ONLY. NO OTHER CONDITIONS ARE EXPRESSED OR IMPLIED.

HYDRAULIC TIE - ROD CYLINDERS - 3000 PSI WP

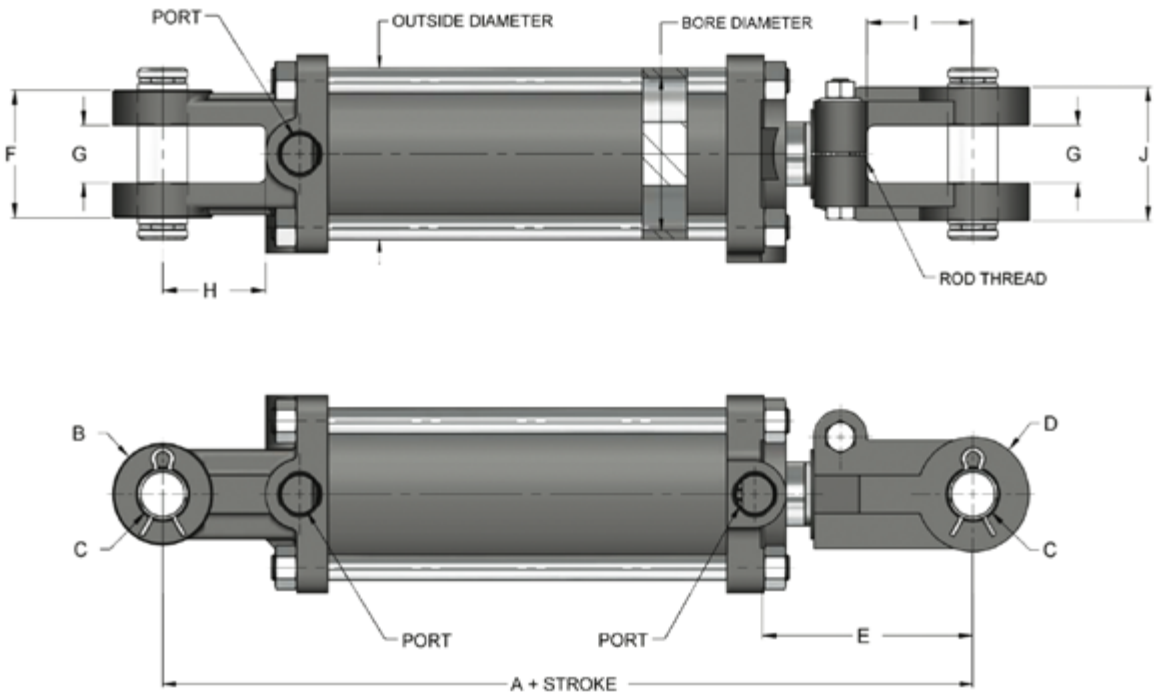

PART NUMBER	CYLINDER BORE	OUTSIDE DIAMETER	ROD THREAD	A1	B	C2	D	E3	F	G4	H	I	J	PORTS
TR3-20	2.00"	2.38"	1.125-12 UNF	10.25"	2.00"	1.01"	2.00"	4.17"	2.44"	1.14"	2.00"	2.12"	2.50"	3/8 NPT OR SAE 8
TR3-25	2.50"	2.89"	1.125-12 UNF	10.25"	2.00"	1.01"	2.00"	4.17"	2.44"	1.14"	2.00"	2.12"	2.50"	3/8 NPT OR SAE 8
TR3-30	3.00"	3.39"	1.25-12 UNF	10.25"	2.00"	1.01"	2.00"	4.14"	2.72"	1.14"	2.00"	2.12"	2.72"	1/2 NPT OR SAE 8
TR3-35	3.50"	4.00"	1.25-12 UNF	10.25"	2.00"	1.01"	2.00"	4.09"	2.72"	1.14"	2.00"	2.12"	2.72"	1/2 NPT OR SAE 8
TR3-40	4.00"	4.50"	1.25-12 UNF	10.25"	2.00"	1.01"	2.00"	3.82"	2.72"	1.14"	2.12"	2.12"	2.72"	1/2 NPT OR SAE 8
TR3-50	5.00"	5.50"	1.500-12 UNF	12.25"	2.75"	1.26"	2.75"	5.00"	2.87"	1.25"	2.12"	2.12"	2.95"	1/2 NPT OR SAE 10

1. FOR 8.00" ASAE STROKE : A = 12.25"
   FOR 16.00" ASAE STROKE : A = 15.50"
2. FOR 16.00" ASAE STROKE : C = 1.26"
3. FOR 8.00" ASAE STROKE : E = 5.75" (2.00" TO 3.00" BORE) E = 5.62" (3.50" BORE) E = 5.56" (4.00" BORE)
   FOR 16.00" ASAE STROKE : E = 9.00" (3.00" BORE) E = 8.87" (3.50" BORE) E = 8.81" (4.00" BORE) E = 7.43" (5.00" BORE)
4. FOR 5.00" BORE : G (FRONT CLEVIS) = 1.18" G (END CAP) = 1.31"

MAXIMUM RETRACTED WORKING PRESSURE = 3000 psi
MAXIMUM EXTENDED WORKING PRESSURE = SEE TABLE
RETRACTED AND STROKE TOLERANCE ± 1/8"
DIMENSIONS A AND E ARE FOR REFERENCES ONLY AS CLEVIS IS ADJUSTABLE
* NPT PORTS ARE ALSO AVAILABLE.

HYDRO CUSTOM IS NOT RESPONSIBLE FOR INCORRECT RESULTS OBTAINED WITH FIGURES IN THIS DOCUMENT. INFORMATION IS FOR REFERENCE ONLY. NO OTHER CONDITIONS ARE EXPRESSED OR IMPLIED.

AGRICULTURAL									
PART NUMBER	BORE & STROKE	DIMENSIONS		ROD DIAMETER	PIN SIZE	PORTS	COLUMN LOAD (LBS)	PRESSURE (PSI)	WEIGHT (LBS)
		RETRACTED	EXTENDED						
TR3-2004	2" X 4"	14-1/4"	18-1/4"	1-1/8"	1"	SAE 8 OR 3/8 NPT	9400	3000	17
TR3-2006	2" X 6"	16-1/4"	22-1/4"				9400	3000	19
TR3-2008	2" X 8"	18-1/4"	26-1/4"				9400	3000	21
TR3-2008-ASAE*	2" X 8"	20-1/4"	28-1/4"				9400	3000	22
TR3-2010	2" X 10"	20-1/4"	30-1/4"				9400	3000	23
TR3-2012	2" X 12"	22-1/4"	34-1/4"				9400	3000	25
TR3-2014	2" X 14"	24-1/4"	38-1/4"				9400	3000	27
TR3-2016	2" X 16"	26-1/4"	42-1/4"				8400	2600	28
TR3-2018	2" X 18"	28-1/4"	46-1/4"				7000	2200	30
TR3-2020	2" X 20"	30-1/4"	50-1/4"				5900	1900	32
TR3-2024	2" X 24"	34-1/4"	58-1/4"				4400	1400	36
TR3-2030	2" X 30"	40-1/4"	70-1/4"				3000	900	41
TR3-2036	2" X 36"	46-1/4"	82-1/4"				2200	700	47
TR3-2504	2.5" X 4"	14-1/4"	18-1/4"	1-1/4"	1"	SAE 8 OR 3/8 NPT	14700	3000	22
TR3-2506	2.5" X 6"	16-1/4"	22-1/4"				14700	3000	24
TR3-2508	2.5" X 8"	18-1/4"	26-1/4"				14700	3000	26
TR3-2508-ASAE*	2.5" X 8"	20-1/4"	28-1/4"				14700	3000	27
TR3-2510	2.5" X 10"	20-1/4"	30-1/4"				14700	3000	29
TR3-2512	2.5" X 12"	22-1/4"	34-1/4"				14700	3000	31
TR3-2514	2.5" X 14"	24-1/4"	38-1/4"				14700	3000	34
TR3-2516	2.5" X 16"	26-1/4"	42-1/4"				12800	2600	36
TR3-2518	2.5" X 18"	28-1/4"	46-1/4"				10700	2100	38
TR3-2520	2.5" X 20"	30-1/4"	50-1/4"				9100	1800	41
TR3-2524	2.5" X 24"	34-1/4"	58-1/4"				6700	1300	45
TR3-2530	2.5" X 30"	40-1/4"	70-1/4"				4600	900	53
TR3-2536	2.5" X 36"	46-1/4"	82-1/4"				3400	600	60
TR3-3004	3" X 4"	14-1/4"	18-1/4"	1-1/4"	1"	SAE 8 OR 1/2 NPT	21200	3000	26
TR3-3006	3" X 6"	16-1/4"	22-1/4"				21200	3000	29
TR3-3008	3" X 8"	18-1/4"	26-1/4"				21200	3000	32
TR3-3008-ASAE*	3" X 8"	20-1/4"	28-1/4"				21200	3000	32
TR3-3010	3" X 10"	20-1/4"	30-1/4"				21200	3000	34
TR3-3012	3" X 12"	22-1/4"	34-1/4"				21200	3000	37
TR3-3014	3" X 14"	24-1/4"	38-1/4"				21200	3000	40
TR3-3016	3" X 16"	26-1/4"	42-1/4"	1-1/2"			18800	2600	43
TR3-3016-ASAE*	3" X 16"	31-1/2"	47-1/2"		1-1/4"		14900	2100	45
TR3-3018	3" X 18"	28-1/4"	46-1/4"		1"		15700	2200	45
TR3-3020	3" X 20"	30-1/4"	50-1/4"				13300	1800	48
TR3-3024	3" X 24"	34-1/4"	58-1/4"				9900	1400	53
TR3-3030	3" X 30"	40-1/4"	70-1/4"				6800	900	62
TR3-3036	3" X 36"	46-1/4"	82-1/4"				4900	700	70

* NPT PORTS ARE ALSO AVAILABLE.
NOTE : COLUMN LOAD IS THE MAXIMUM PUSHING LOAD SUGGESTED USING A MINIMUM SAFETY FACTOR OF 2 AND BASED ON A PIN TO PIN MOUNTING CALCULATION.

* ASAE = AMERICAN SOCIETY OF AGRICULTURE ENGINEERS
DESIGNATES AN INDUSTRY MOUNTING STANDARD FOR 8" AND 16" STROKE CYLINDERS

HYDRO CUSTOM IS NOT RESPONSIBLE FOR INCORRECT RESULTS OBTAINED WITH FIGURES IN THIS DOCUMENT. INFORMATION IS FOR REFERENCE ONLY. NO OTHER CONDITIONS ARE EXPRESSED OR IMPLIED.

HYDRAULIC TIE - ROD CYLINDERS - 3000 PSI WP

AGRICULTURAL									
PART NUMBER	BORE & STROKE	DIMENSIONS		ROD DIAMETER	PIN SIZE	PORTS	COLUMN LOAD (LBS)	PRESSURE (PSI)	WEIGHT (LBS)
		RETRACTED	EXTENDED						
TR3-3504	3.5" X 4"	14-1/4"	18-1/4"	1-3/8"	1"	SAE 8 OR 1/2 NPT	28800	3000	34
TR3-3506	3.5" X 6"	16-1/4"	22-1/4"				28800	3000	37
TR3-3508	3.5" X 8"	18-1/4"	26-1/4"				28800	3000	40
TR3-3508-ASAE*	3.5" X 8"	20-1/4"	28-1/4"				28800	3000	41
TR3-3510	3.5" X 10"	20-1/4"	30-1/4"				28300	2900	44
TR3-3512	3.5" X 12"	22-1/4"	34-1/4"				28700	2900	47
TR3-3514	3.5" X 14"	24-1/4"	38-1/4"				23000	2300	50
TR3-3516	3.5" X 16"	26-1/4"	42-1/4"	1-1/2"			18800	1900	53
TR3-3516-ASAE*	3.5" X 16"	31-1/2"	47-1/2"		1-1/4"		14900	1500	56
TR3-3518	3.5" X 18"	28-1/4"	46-1/4"		1"		15700	1600	56
TR3-3520	3.5" X 20"	30-1/4"	50-1/4"				13300	1300	60
TR3-3524	3.5" X 24"	34-1/4"	58-1/4"				9900	1000	66
TR3-3530	3.5" X 30"	40-1/4"	70-1/4"				6800	700	76
TR3-3536	3.5" X 36"	46-1/4"	82-1/4"				4900	500	85
TR3-4004	4" X 4"	14-1/4"	18-1/4"	1-1/2"	1"	SAE 8 OR 1/2 NPT	37600	3000	41
TR3-4006	4" X 6"	16-1/4"	22-1/4"				37600	3000	45
TR3-4008	4" X 8"	18-1/4"	26-1/4"				37600	3000	49
TR3-4008-ASAE*	4" X 8"	20-1/4"	28-1/4"				37600	3000	50
TR3-4010	4" X 10"	20-1/4"	30-1/4"				37600	3000	52
TR3-4012	4" X 12"	22-1/4"	34-1/4"				37600	3000	56
TR3-4014	4" X 14"	24-1/4"	38-1/4"				37600	3000	60
TR3-4016	4" X 16"	26-1/4"	42-1/4"	1-3/4"			37600	3000	64
TR3-4016-ASAE*	4" X 16"	31-1/2"	47-1/2"		1-1/4"		37600	3000	68
TR3-4018	4" X 18"	28-1/4"	46-1/4"		1"		37600	3000	68
TR3-4020	4" X 20"	30-1/4"	50-1/4"				35000	2700	72
TR3-4024	4" X 24"	34-1/4"	58-1/4"				26000	2000	80
TR3-4030	4" X 30"	40-1/4"	70-1/4"	2"			17900	1400	92
TR3-4036	4" X 36"	46-1/4"	82-1/4"				13000	1000	104
TR3-5004	5" X 4"	16-1/4"	20-1/4"	2"	1-1/4"	SAE 8 OR 1/2 NPT	58900	3000	71
TR3-5006	5" X 6"	18-1/4"	24-1/4"				58900	3000	76
TR3-5008-ASAE*	5" X 8"	22-1/4"	30-1/4"				58900	3000	81
TR3-5010	5" X 10"	22-1/4"	32-1/4"				58900	3000	86
TR3-5012	5" X 12"	24-1/4"	36-1/4"				58900	3000	91
TR3-5014	5" X 14"	26-1/4"	40-1/4"				58900	3000	96
TR3-5016	5" X 16"	28-1/4"	44-1/4"				58900	3000	101
TR3-5016-ASAE*	5" X 16"	31-1/2"	47-1/2"				58900	3000	104
TR3-5018	5" X 18"	30-1/4"	48-1/4"				58900	3000	106
TR3-5020	5" X 20"	32-1/4"	52-1/4"				55200	2800	112
TR3-5024	5" X 24"	36-1/4"	60-1/4"				41500	2100	122
TR3-5030	5" X 30"	42-1/4"	72-1/4"				28800	1400	137
TR3-5036	5" X 36"	48-1/4"	84-1/4"				21200	1000	153

* NPT PORTS ARE ALSO AVAILABLE.
NOTE : COLUMN LOAD IS THE MAXIMUM PUSHING LOAD SUGGESTED USING A MINIMUM SAFETY FACTOR OF 2 AND BASED ON A PIN TO PIN MOUNTING CALCULATION.

* ASAE = AMERICAN SOCIETY OF AGRICULTURE ENGINEERS
DESIGNATES AN INDUSTRY MOUNTING STANDARD FOR 8" AND 16" STROKE CYLINDERS

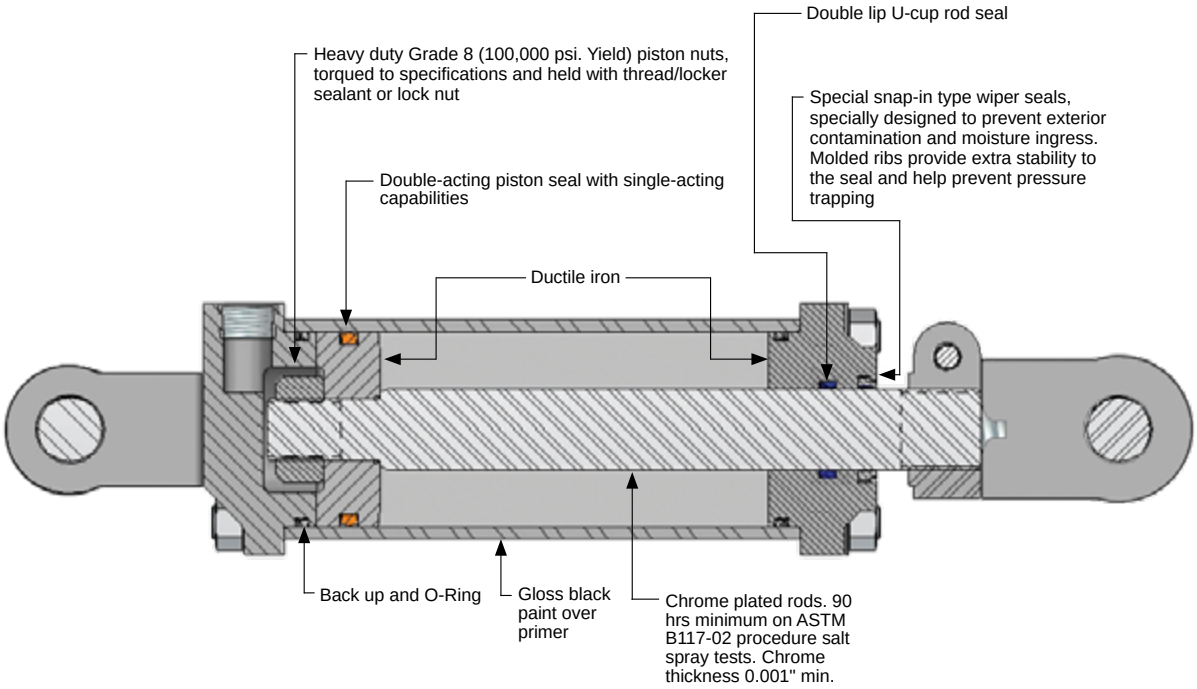

SEAL TEMPERATURE RANGE : -30˚C / +100˚C (-22˚F / +212˚F)
SEAL MAXIMUM SPEED : 3 FT / SEC

- All seals are top grade/first quality North American made
- All components are cnc machined for higher accuracy and conformity
- Quality controlled in China by qualified Canadian technicians
- 100% Tested. All cylinders are submitted to static and dynamic pressure tests to recommended specifications

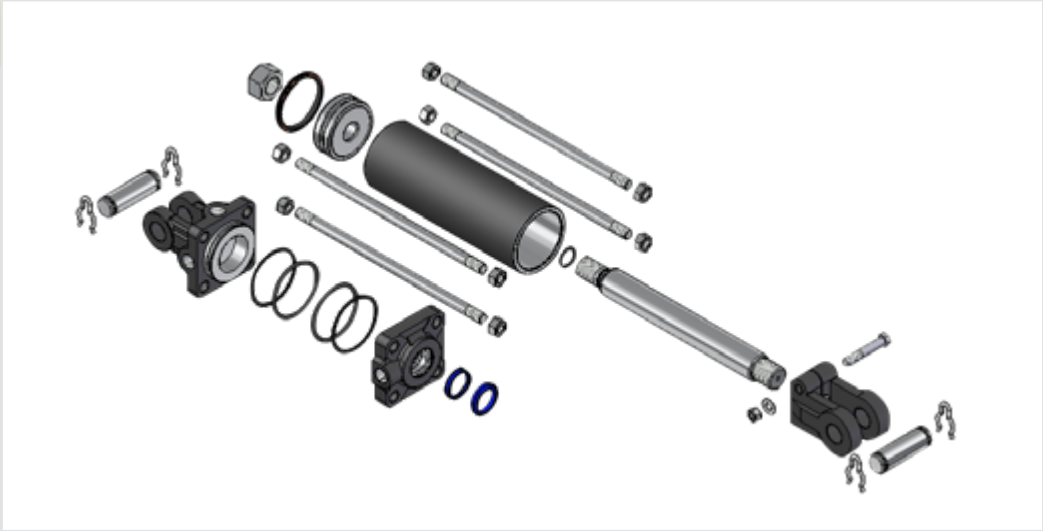

HYDRO CUSTOM IS NOT RESPONSIBLE FOR INCORRECT RESULTS OBTAINED WITH FIGURES IN THIS DOCUMENT. INFORMATION IS FOR REFERENCE ONLY. NO OTHER CONDITIONS ARE EXPRESSED OR IMPLIED.

INVERTED TELESCOPIC CYLINDERS

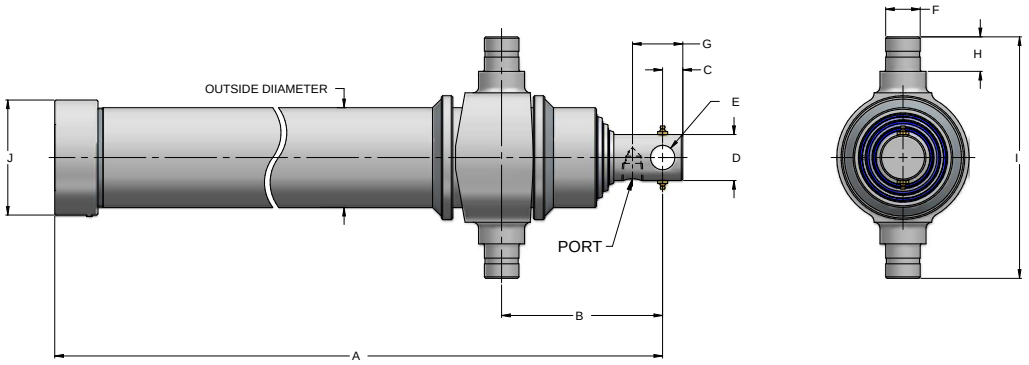

7 TONS-INVERTED TELESCOPIC CYLINDERS															
PART NUMBER	CAPACITY	STROKE	OUTSIDE DIAMETER	A	B	C	D	E	F	G	H	I	J	PORT	WEIGHT (LBS)
TC-07833	7 TONS	78"	3.75"	34.62"	7.00"	0.87"	2.00"	1.06"	1.25"	2.25"	1.25"	9.00"	4.25"	1/2 NPT	86
TC-09033		90"	3.75"	38.62"											94
TC-10833		108"	3.75"	44.62"											106

12 TONS-INVERTED TELESCOPIC CYLINDERS															
PART NUMBER	CAPACITY	STROKE	OUTSIDE DIAMETER	A	B	C	D	E	F	G	H	I	J	PORT	WEIGHT (LBS)
TC-07843	12 TONS	78"	4.50"	33.87"	7.00"	0.87"	2.00"	1.06"	1.50"	2.25"	1.50"	10.50"	5.00"	1/2 NPT	99
TC-09043		90"	4.50"	37.87"											109
TC-10843		108"	4.50"	43.87"											125
TC-12043		120"	4.50"	47.87"											135
TC-1204M-S-PT		120"	4.50"	47.87"	13.00"										137
TC-1324M-S-PT		132"	4.50"	51.87"											157
TC-14443M-S-PT		144"	4.50"	55.87"											171

RETRACTED TOLERANCE ± 1/8"

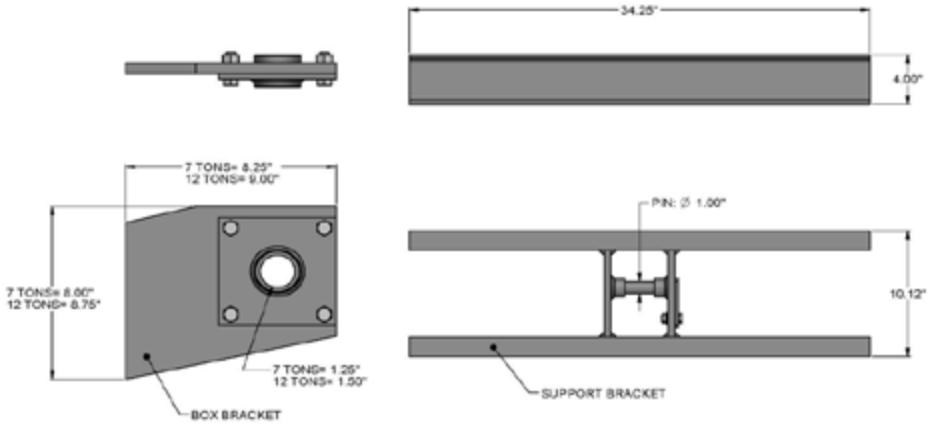

TELESCOPIC ACCESSORIES	
PART NUMBER	DESCRIPTION
TC-SB	BRACKET FOR 7 AND 12 TONS
TC-S07-PAIR	BOX BRACKET KIT 7 TONS
TC-S12-PAIR	BOX BRACKET KIT 12 TONS

HYDRO CUSTOM IS NOT RESPONSIBLE FOR INCORRECT RESULTS OBTAINED WITH FIGURES IN THIS DOCUMENT. INFORMATION IS FOR REFERENCE ONLY. NO OTHER CONDITIONS ARE EXPRESSED OR IMPLIED.

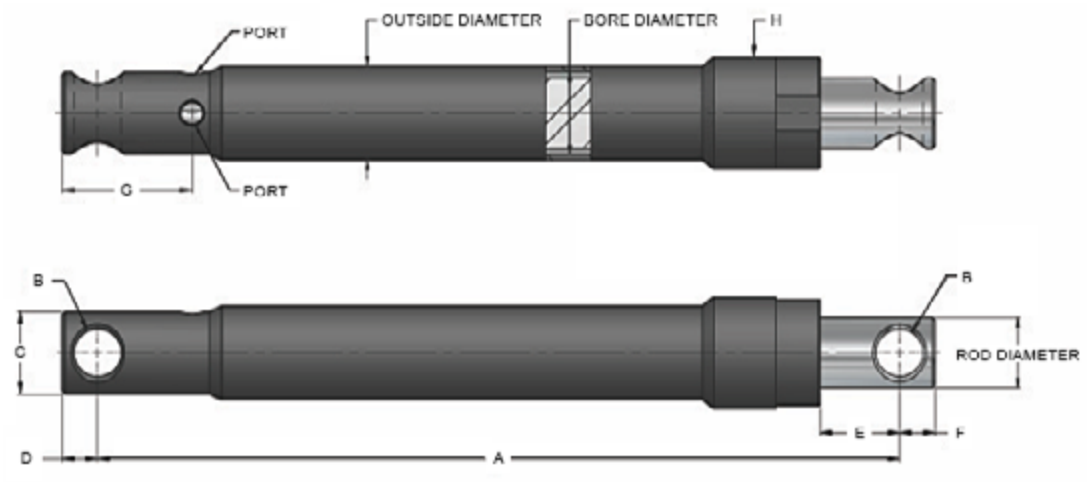

PART NUMBER	REPLACEMENT	BORE & STROKE	OUTSIDE DIAMETER	ROD DIAMETER	A	B	C	D	E	F	G	H	PORT	WEIGHT (LBS)
ASP-1510-0750	ARCTIC	1.75" X 10.00"	2.00"	1.50"	17.00"	0.76"	1.75"	0.75"	1.68"	0.75"	2.75"	2.37"	1/4-NPT (2X)	12
ASP-1512-0750	ARCTIC	1.75" X 12.00"	2.00"	1.50"	19.00"	0.76"	1.75"	0.75"	1.68"	0.75"	2.75"	2.37"	1/4-NPT (2X)	13
FSP-1510-1000	FISHER	1.75" X 10.00"	2.00"	1.50"	17.00"	1.01"	1.75"	0.75"	1.68"	0.75"	2.75"	2.37"	1/4-NPT (2X)	11
FSP-1512-1000	FISHER	1.75" X 12.00"	2.00"	1.50"	19.25"	1.01"	1.75"	0.75"	1.93"	0.75"	2.75"	2.37"	1/4-NPT (2X)	13
FSP-2016-1250	FISHER	2.25" X 16.00"	2.50"	2.00"	23.25"	1.26"	2.25"	0.87"	1.75"	0.87"	2.75"	3.00"	1/4-NPT (2X)	27
MSP-1506-0625	MEYER	1.75" X 6.00"	2.00"	1.50"	12.37"	0.63"	1.62"	0.75"	1.56"	0.75"	2.12"	2.37"	1/4-NPT	9
MSP-1510-0625	MEYER	1.75" X 10.00"	2.00"	1.50"	16.18"	0.63"	1.62"	0.75"	1.62"	0.75"	2.12"	2.37"	1/4-NPT	14
MSP-1512-0625	MEYER	1.75" X 12.00"	2.00"	1.50"	18.00"	0.63"	1.62"	0.75"	1.43"	0.75"	2.12"	2.37"	1/4-NPT	15
MSP-2012-0625	MEYER	2.25" X 12.00"	2.50"	2.00"	18.00"	0.63"	1.62"	0.75"	0.75"	0.75"	2.25"	3.00"	1/4-NPT	24
WSP-1506-0750	WESTERN	1.75" X 6.00"	2.00"	1.50"	13.00"	0.76"	1.75"	0.68"	1.37"	0.68"	2.75"	2.37"	1/4-NPT (2X)	11
WSP-1508-0750	WESTERN	1.75" X 8.00"	2.00"	1.50"	15.25"	0.76"	1.75"	0.68"	1.62"	0.68"	2.75"	2.37"	1/4-NPT (2X)	12
WSP-1510-0750	WESTERN	1.75" X 10.00"	2.00"	1.50"	17.25"	0.76"	1.75"	0.68"	1.62"	0.68"	2.75"	2.37"	1/4-NPT (2X)	14
WSP-1510-1000	WESTERN	1.75" X 10.00"	2.00"	1.50"	17.00"	1.01"	1.75"	0.75"	1.43"	0.75"	2.75"	2.37"	1/4-NPT (2X)	14
WSP-2006-0750	WESTERN	2.25" X 6.00"	2.50"	2.00"	13.18"	0.76"	2.25"	0.75"	1.56"	0.75"	2.75"	3.00"	1/4-NPT (2X)	18
WSP-2010-1000	WESTERN	2.25" X 10.00"	2.50"	2.00"	17.25"	1.01"	2.25"	0.75"	1.62"	0.75"	2.75"	3.00"	1/4-NPT (2X)	22
WSP-2016-1000	WESTERN	2.25" X 16.00"	2.50"	2.00"	23.31"	1.01"	2.25"	0.75"	1.68"	0.75"	2.56"	3.00"	1/4-NPT (2X)	31

SEAL TEMPERATURE RANGE : -30˚C / +100˚C (-22˚F / +212˚F)
SEAL MAXIMUM SPEED : 3 FT / SEC

CYLINDER WITH 1 PORT = PORT IN LINE WITH PIN HOLE
RETRACTED AND STROKE TOLERANCE ± 1/8"

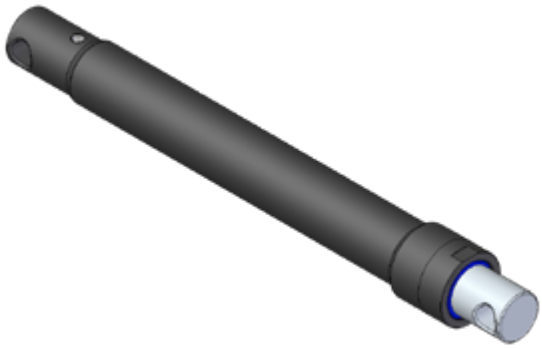

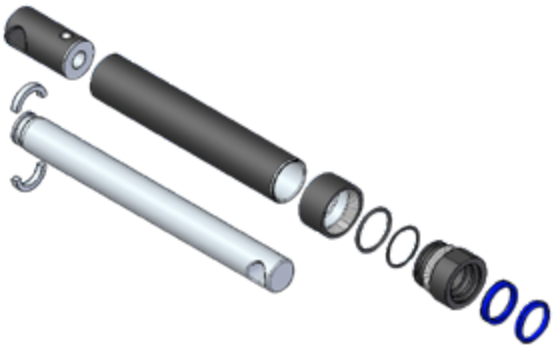

HYDRO CUSTOM IS NOT RESPONSIBLE FOR INCORRECT RESULTS OBTAINED WITH FIGURES IN THIS DOCUMENT. INFORMATION IS FOR REFERENCE ONLY. NO OTHER CONDITIONS ARE EXPRESSED OR IMPLIED.

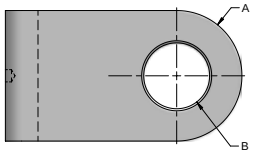

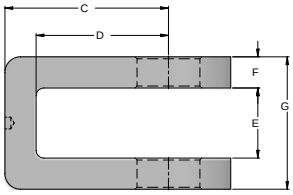

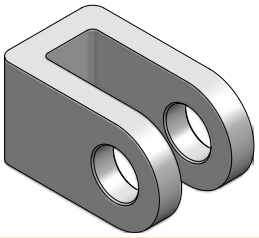

FEMALE CLEVIS								
PART NUMBER	A	B	C	D	E	F	G	MAXIMUM LOAD PUSH / PULL (lbs)
CL-100075-CLP	1.50"	0.76"	1.75"	1.37"	0.87"	0.37"	1.62"	5300
CL-125100-CLP	2.00"	1.01"	2.62"	2.12"	1.12"	0.50"	2.12"	22500
CL-175100-CLP	2.00"	1.01"	2.62"	2.12"	1.12"	0.62"	2.37"	28100
CL-200100-CLP	2.00"	1.01"	2.62"	2.00"	1.12"	0.62"	2.37"	28100
CL-250150-CLP	3.00"	1.51"	3.00"	2.25"	1.62"	0.75"	3.12"	50600

MATERIAL : C1045 CAST STEEL
MAXIMUM PUSHING & PULLING FORCE ARE BASED ON A SUGGESTED MINIMUM SAFETY FACTOR OF 2

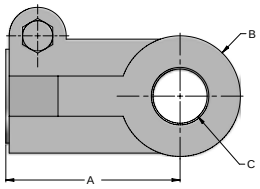

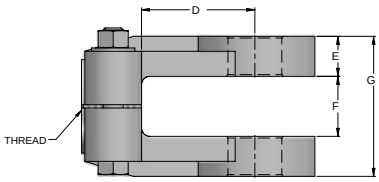

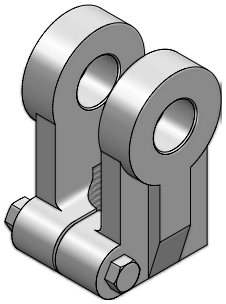

ADJUSTABLE CLEVIS									
PART NUMBER	THREAD	A	B	C	D	E	F	G	MAXIMUM LOAD PUSH / PULL (lbs)
ST-0870718-CVP	0.875-14 UNF	2.75"	1.87"	0.76"	1.62"	0.56"	0.87"	2.00"	5300
ST-1121020-CVP	1.125-12 UNF	3.25"	2.00"	1.01"	2.12"	0.75"	1.12"	2.62"	23000
ST-1121022-CVP	1.125-12 UNF	3.25"	2.25"	1.01"	2.12"	0.75"	1.12"	2.62"	23000
ST-1121222-CVP	1.125-12 UNF	3.25"	2.25"	1.26"	2.12"	0.75"	1.12"	2.62"	23000
ST-1251022-CVP	1.250-12 UNF	3.25"	2.25"	1.01"	2.12"	0.75"	1.12"	2.62"	23000
ST-1311025-CVP	1.312-12 UN	3.25"	2.50"	1.01"	2.12"	0.81"	1.12"	2.75"	33700
ST-1311225-CVP	1.312-12 UN	3.25"	2.50"	1.26"	2.12"	0.81"	1.12"	2.75"	33700
ST-1501025-CVP	1.500-12 UNF	3.25"	2.50"	1.01"	2.12"	0.81"	1.12"	2.75"	33700
ST-1501225-CVP	1.500-12 UNF	3.25"	2.50"	1.26"	2.12"	0.81"	1.12"	2.75"	33700
ST-1501226-CVP	1.500-12 UNF	3.62"	2.75"	1.26"	2.12"	1.06"	1.18"	3.31"	58900

MATERIAL : C1045 CAST STEEL / DUCTILE IRON
MAXIMUM PUSHING & PULLING FORCE ARE BASED ON A SUGGESTED MINIMUM SAFETY FACTOR OF 2

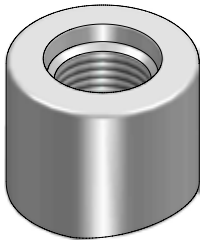

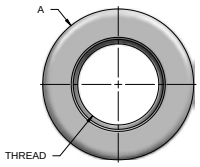

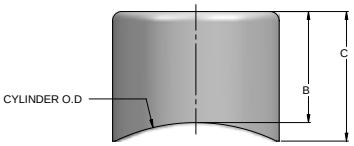

PORT NPT					
PART NUMBER	CYLINDER O.D	THREAD	A	B	C
025N-200062-POP	2.00"	1/4 NPT	0.87"	0.62"	0.68"
037N-250075-POP	2.50"	3/8 NPT	1.12"	0.75"	0.87"
050N-300087-POP	3.00"	1/2 NPT	1.25"	0.87"	0.93"
050N-350087-POP	3.50"	1/2 NPT	1.25"	0.87"	0.93"
050N-400087-POP	4.00"	1/2 NPT	1.25"	0.87"	0.93"
050N-450087-POP	4.50"	1/2 NPT	1.25"	0.87"	0.93"
075N-550100-POP	5.50"	3/4 NPT	1.37"	1.00"	1.06"

PORT SAE					
PART NUMBER	CYLINDER O.D	THREAD	A	B	C
04S-200062-POP	2.00"	SAE 4	0.75"	0.62"	0.68"
06S-250075-POP	2.50"	SAE 6	1.00"	0.75"	0.81"
08S-300093-POP	3.00"	SAE 8	1.12"	0.93"	1.00"
08S-350093-POP	3.50"	SAE 8	1.12"	0.93"	1.00"
08S-400093-POP	4.00"	SAE 8	1.12"	0.93"	1.00"
08S-450093-POP	4.50"	SAE 8	1.12"	0.93"	1.00"
12S-550100-POP	5.50"	SAE 12	1.50"	1.00"	1.06"

MATERIAL : C1020 STEEL
MAXIMUM OPERATING PRESSURE : 3000 psi (SAFETY FACTOR = 2)

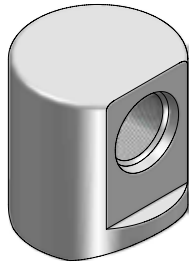

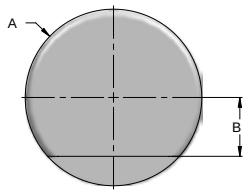

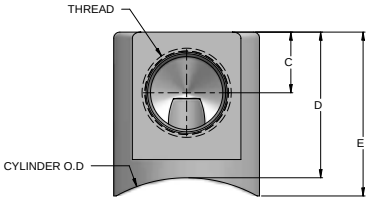

PORT							
PART NUMBER	CYLINDER O.D	THREAD	A	B	C	D	E
025N-200112-90POP	2.00"	1/4 NPT	1.12"	0.37"	0.43"	1.12"	1.25"
037N-250125-90POP	2.50"	3/8 NPT	1.25"	0.43"	0.50"	1.25"	1.37"
050N-300150-90POP	3.00"	1/2 NPT	1.62"	0.50"	0.62"	1.50"	1.68"
050N-350150-90POP	3.50"	1/2 NPT	1.62"	0.50"	0.62"	1.50"	1.62"
050N-400150-90POP	4.00"	1/2 NPT	1.62"	0.50"	0.62"	1.50"	1.62"
050N-450150-90POP	4.50"	1/2 NPT	1.62"	0.50"	0.62"	1.50"	1.62"
075N-550200-90POP	5.50"	3/4 NPT	2.12"	0.62"	0.87"	2.00"	2.18"
04S-200112-90POP	2.00"	SAE 4	1.12"	0.37"	0.43"	1.12"	1.25"
06S-250125-90POP	2.50"	SAE 6	1.25"	0.43"	0.50"	1.25"	1.37"
08S-300150-90POP	3.00"	SAE 8	1.62"	0.50"	0.62"	1.50"	1.68"
08S-350150-90POP	3.50"	SAE 8	1.62"	0.50"	0.62"	1.50"	1.62"
08S-400150-90POP	4.00"	SAE 8	1.62"	0.50"	0.62"	1.50"	1.62"
08S-450150-90POP	4.50"	SAE 8	1.62"	0.50"	0.62"	1.50"	1.62"
12S-550200-90POP	5.50"	SAE 12	2.12"	0.62"	0.81"	2.00"	2.18"

MATERIAL : C1020 STEEL
MAXIMUM OPERATING PRESSURE : 3000 psi (SAFETY FACTOR = 2)

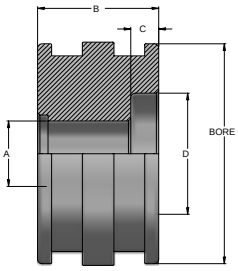

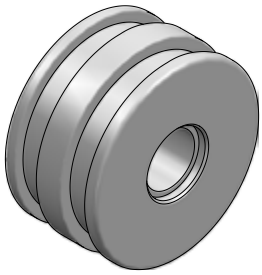

PISTON						
PART NUMBER	BORE	ROD DIAMETER	A	B	C	D
ST-15062-PIP	1.50"	1.00"	0.62"	1.50"	NONE	NONE
ST-20075-PIP	2.00"	1.25"	0.75"	1.50"	NONE	NONE
ST-25087-PIP	2.50"	1.50"	0.87"	1.62"	0.37"	1.62"
ST-30087-PIP	3.00"	1.50"	0.87"	1.62"	0.37"	1.62"
ST-35100-PIP	3.50"	1.75"	1.00"	1.62"	0.43"	1.87"
ST-40125-PIP	4.00"	2.00"	1.25"	1.75"	0.68"	2.62"
ST-50150-PIP	5.00"	2.50"	1.50"	2.50"	0.62"	3.25"
ST-60200-PIP	6.00"	3.00"	2.00"	2.50"	0.62"	3.62"

MATERIAL : 65-45-12 DUCTILE CAST IRON
PISTON FOR 5" & 6" BORE COME WITH A WEAR RING GROOVE

HYDRO CUSTOM IS NOT RESPONSIBLE FOR INCORRECT RESULTS OBTAINED WITH FIGURES IN THIS DOCUMENT. INFORMATION IS FOR REFERENCE ONLY. NO OTHER CONDITIONS ARE EXPRESSED OR IMPLIED.

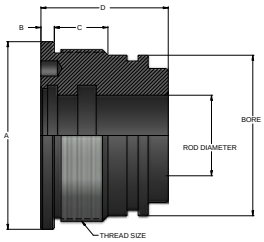

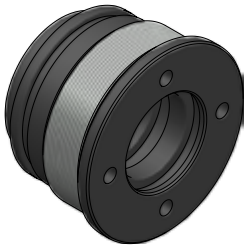

GLAND							
PART NUMBER	BORE	ROD DIAMETER	THREAD SIZE	A	B	C	D
ST-15100-GLP	1.50"	1.00"	1.700-12 UN	2.00"	0.25"	0.75"	2.00"
ST-20125-GLP	2.00"	1.25"	2.200-12 UN	2.50"	0.25"	0.87"	2.25"
ST-25150-GLP	2.50"	1.50"	2.700-12 UN	3.00"	0.25"	1.00"	2.37"
ST-30150-GLP	3.00"	1.50"	3.200-12 UN	3.50"	0.25"	1.00"	2.37"
ST-35175-GLP	3.50"	1.75"	3.700-12 UN	4.00"	0.25"	1.00"	2.37"
ST-40200-GLP	4.00"	2.00"	4.200-12 UN	4.50"	0.25"	1.00"	2.37"
ST-50250-GLP	5.00"	2.50"	5.200-12 UN	5.50"	0.31"	1.37"	3.00"
ST-60300-GLP	6.00"	3.00"	6.250-12 UN	6.75"	0.50"	1.56"	3.50"

MATERIAL : 65-45-12 DUCTILE CAST IRON
GLAND FOR 5" & 6" BORE COMES WITH A WEAR RING GROOVE

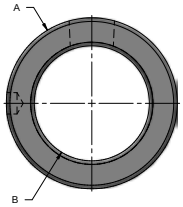

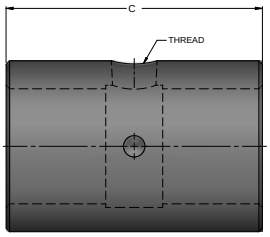

BUSHING						
PART NUMBER	A	B	C	THREAD	MAXIMUM PUSH (LBS)	MAXIMUM PULL (LBS)
BU-075200-BUP	1.25"	0.76"	2.00"	1/8 NPT	5300	5300
BU-100225-BUP	1.50"	1.01"	2.25"	1/8 NPT	21200	21200
BU-125225-BUP	2.00"	1.26"	2.25"	1/8 NPT	29000	29000
BU-150250-BUP	2.25"	1.51"	2.50"	1/8 NPT	37700	37700
BU-200325-BUP*	3.00"	*2.01"	3.25"	1/8 NPT	59000	50000

* COME WITH A SLEEVE TO PASS FROM 2" TO 1 3/4" PIN DIAMETER
MAXIMUM PUSHING / PULLING FORCE ARE BASED ON A SUGGESTED MINIMUM SAFETY FACTOR OF 2
MATERIAL : C1020 STEEL

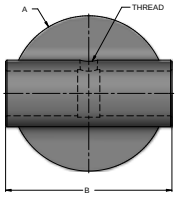

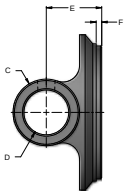

END CAP BUSHING										
PART NUMBER	BORE	THREAD	A	B	C	D	E	F	MAXIMUM PUSH (LBS)	MAXIMUM PULL (LBS)
BU-15075-CAP	1.50"	1/8 NPT	2.00"	2.25"	1.25"	0.76"	1.12"	0.12"	5300	5300
BU-20100-CAP	2.00"	1/8 NPT	2.50"	2.75"	1.50"	1.01"	1.25"	0.12"	9500	9500
BU-25100-CAP	2.50"	1/8 NPT	3.00"	3.25"	1.50"	1.01"	1.25"	0.12"	14700	14700
BU-30100-CAP	3.00"	1/8 NPT	3.50"	3.75"	1.50"	1.01"	1.25"	0.12"	21200	21200
BU-35125-CAP	3.50"	1/8 NPT	4.00"	4.25"	2.00"	1.26"	1.50"	0.12"	29000	29000
BU-40150-CAP	4.00"	1/8 NPT	4.50"	4.75"	2.25"	1.51"	1.62"	0.12"	37700	37700
BU-50200-CAP*	5.00"	1/8 NPT	5.50"	5.75"	3.00"	2.01"	2.25"	0.25"	59000	50000

* COME WITH A SLEEVE TO PASS FROM 2" TO 1 3/4" PIN DIAMETER
MAXIMUM PUSHING / PULLING FORCE ARE BASED ON A SUGGESTED MINIMUM SAFETY FACTOR OF 2
MATERIAL : C1045 CAST STEEL

HYDRO CUSTOM IS NOT RESPONSIBLE FOR INCORRECT RESULTS OBTAINED WITH FIGURES IN THIS DOCUMENT. INFORMATION IS FOR REFERENCE ONLY. NO OTHER CONDITIONS ARE EXPRESSED OR IMPLIED.

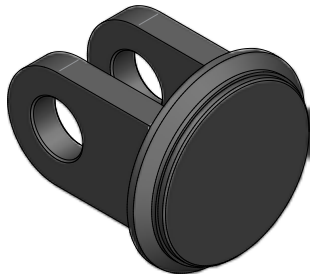

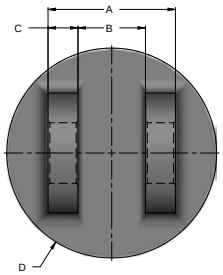

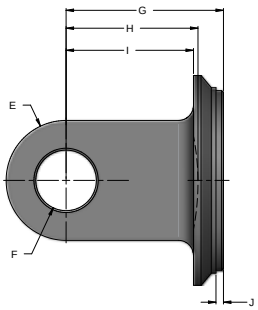

END CAP CLEVIS													
PART NUMBER	BORE	A	B	C	D	E	F	G	H	I	J	MAXIMUM PUSH (LBS)	MAXIMUM PULL (LBS)
CL-15075-CAP	1.50"	1.62"	0.87"	0.37"	2.00"	1.50"	0.76"	1.87"	none	1.37"	0.12"	5300	5300
CL-20100-CAP	2.00"	2.12"	1.12"	0.50"	2.50"	2.00"	1.01"	2.62"	none	2.12"	0.12"	9500	9500
CL-25100-CAP	2.50"	2.12"	1.12"	0.50"	3.00"	2.00"	1.01"	2.62"	none	2.12"	0.12"	14750	14700
CL-30100-CAP	3.00"	2.12"	1.12"	0.50"	3.50"	2.00"	1.01"	2.62"	none	2.12"	0.12"	22500	22500
CL-35100-CAP	3.50"	2.37"	1.12"	0.62"	4.00"	2.00"	1.01"	2.62"	2.12"	2.00"	0.12"	28100	28100
CL-40100-CAP	4.00"	2.37"	1.12"	0.62"	4.50"	2.00"	1.01"	2.50"	2.00"	1.75"	0.12"	28100	28100
CL-50150-CAP	5.00"	3.12"	1.62"	0.75"	5.50"	3.00"	1.51"	3.12"	none	2.25"	0.25"	50600	50600

MATERIAL : C1045 CAST STEEL
MAXIMUM PUSHING / PULLING FORCE ARE BASED ON A SUGGESTED MINIMUM SAFETY FACTOR OF 2

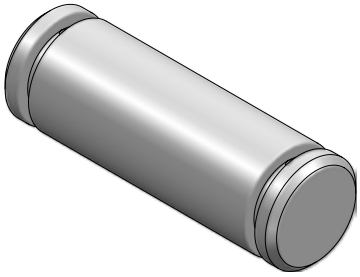

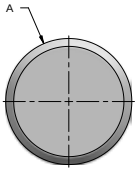

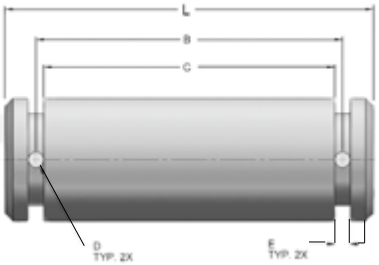

PIN						
PART NUMBER	A	B	C	D	E	MAXIMUM LOAD PUSH / PULL (LBS)
075175-PNP	0.75"	1.87"	1.75"	0.12"	0.12"	15700
075212-PNP	0.75"	2.25"	2.12"	0.12"	0.12"	15700
100237-PNP	1.00"	2.50"	2.37"	0.12"	0.12"	28100
100262-PNP	1.00"	2.75"	2.62"	0.12"	0.12"	28100
100275-PNP	1.00"	2.87"	2.75"	0.12"	0.12"	28100
100287-PNP	1.00"	3.00"	2.87"	0.12"	0.12"	28100
125350-PNP	1.25"	3.62"	3.50"	0.12"	0.12"	50500
150337-PNP	1.50"	3.56"	3.37"	0.18"	0.18"	63100

MATERIAL : C1045 STEEL ZINC PLATED
MAXIMUM PUSHING / PULLING FORCE ARE BASED ON A SUGGESTED MINIMUM SAFETY FACTOR OF 2

HYDRO CUSTOM IS NOT RESPONSIBLE FOR INCORRECT RESULTS OBTAINED WITH FIGURES IN THIS DOCUMENT. INFORMATION IS FOR REFERENCE ONLY. NO OTHER CONDITIONS ARE EXPRESSED OR IMPLIED.

SEAL KITS

BU AND CL SERIES	
PART NUMBER	DESCRIPTION
SK-BU-CL151000	1-1/2” BORE & 1” ROD
SK-BU-CL201250	2” BORE & 1-1/4” ROD
SK-BU-CL251500	2-1/2” BORE & 1-1/2” ROD
SK-BU-CL301500	3” BORE & 1-1/2” ROD
SK-BU-CL351750	3-1/2” BORE & 1-3/4” ROD
SK-BU-CL402000	4” BORE & 2” ROD
SK-BU-CL502500	5” BORE & 2-1/2” ROD

WT3 SERIES	
PART NUMBER	DESCRIPTION
SK-WT3-151000	1-1/2” BORE & 1” ROD
SK-WT3-201250	2” BORE & 1-1/4” ROD
SK-WT3-251375	2-1/2” BORE & 1-3/8” ROD
SK-WT3-301500	3” BORE & 1-1/2” ROD
SK-WT3-351750	3-1/2” BORE & 1-3/4” ROD
SK-WT3-402000	4” BORE & 2” ROD

TCL SERIES	
PART NUMBER	DESCRIPTION
SK-TCL-151000	1-1/2” BORE & 1” ROD
SK-TCL-201125	2” BORE & 1-1/8” ROD
SK-TCL-251250	2-1/2” BORE & 1-1/4” ROD
SK-TCL-301500	3” BORE & 1-1/2” ROD
SK-TCL-351750	3-1/2” BORE & 1-3/4” ROD
SK-TCL-402000	4” BORE & 2” ROD

TR2.5 SERIES	
PART NUMBER	DESCRIPTION
SK-TR2.5-201125-LA4	2” BORE & 1-1/8” ROD
SK-TR2.5-251125-LA4	2-1/2” BORE & 1-1/8” ROD
SK-TR2.5-251250-LA4	2-1/2” BORE & 1-1/4” ROD
SK-TR2.5-301250-LA4	3” BORE & 1-1/4” ROD
SK-TR2.5-301500-LA4	3” BORE & 1-1/2” ROD
SK-TR2.5-351250-LA4	3-1/2” BORE & 1-1/4” ROD
SK-TR2.5-351500-LA4	3-1/2” BORE & 1-1/2” ROD
SK-TR2.5-401250-LA4	4” BORE & 1-1/4” ROD
SK-TR2.5-401500-LA4	4” BORE & 1-1/2” ROD
SK-TR2.5-401750-LA4	4” BORE & 1-3/4” ROD
SK-TR2.5-402000-LA4	4” BORE & 2” ROD

TR3 SERIES	
PART NUMBER	DESCRIPTION
SK-TR3-201125	2” BORE & 1-1/8” ROD
SK-TR3-251250	2-1/2” BORE & 1-1/4” ROD
SK-TR3-301375	3” BORE & 1-3/8” ROD
SK-TR3-351375	3-1/2” BORE & 1-3/8” ROD
SK-TR3-401750	4” BORE & 1-3/4” ROD
SK-TR3-502000	5” BORE & 2” ROD

LINEAR TRANSDUCER EQUIPPED CYLINDER

HYDRO CUSTOM CYLINDERS ARE DESIGNED SPECIFICALLY FOR MOBILE HYDRAULIC APPLICATION :

- LIVE CYLINDER POSITIONING FEEDBACK.
- ADAPTABLE TO THE NEW MECHATRONIC ENGINEERING.
- AVAILABLE WITH INTERNAL, EXTERNAL, AND PARALLEL DESIGN.
- HIGH VIBRATION/SHOCK RESISTANCE.
- PARALLEL SERIES CAN BE INTEGRATED TO EXISTING SYSTEMS.
- ANALOG OR DIGITAL OUTPUTS
- HIGH CYCLING AND VIBRATION LIFE

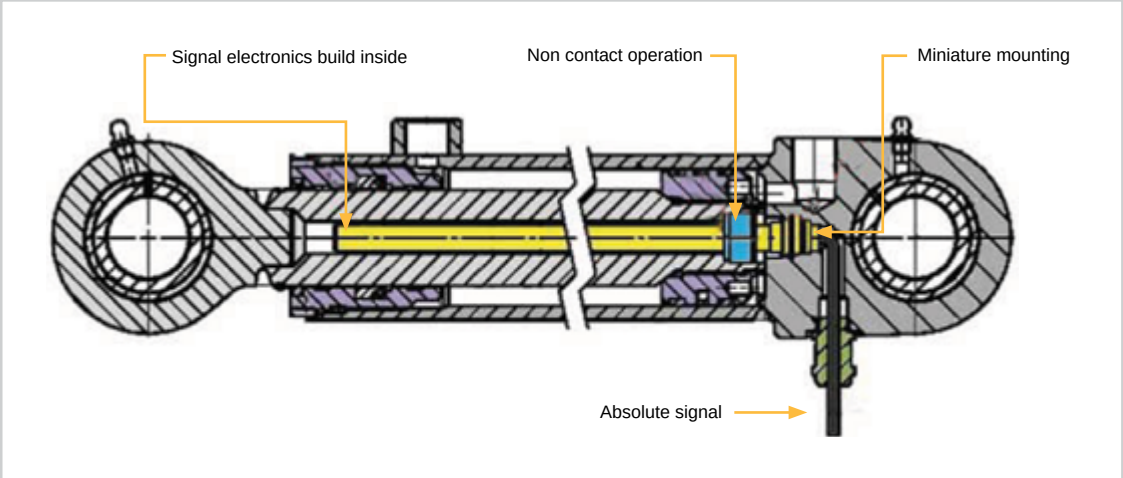

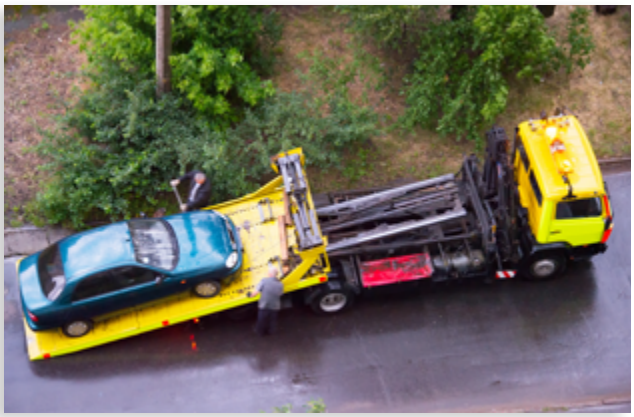

Design, manufacturing and quality control

Hydrolico is your partner to manufacture high-quality hydraulic cylinders from 2.5" to more than 25" bore and up to 24' long. Our manufacturing division, Hydrolico Inc., has been in business for more than 25 years and recently expanded to a brand new 70,000 ft^2 facility.

Here are some of the many benefits we can offer:

- An experienced and qualified team as well as its leading-edge production equipment
- Experienced advisors in development and design
- Innovative manufacturing solutions tailored to your needs
- Customized manufacturing solutions adapted to the desired speed, quantity and price
- A variety of specialized services that can be customized to your needs, including validation of 3D prototypes, repeated rigorous testing, installation and assembly in a contaminant-free environment

HC Hydro Custom

OUR HIGH QUALITY CUSTOM MOTORS ARE DESIGNED WITH GEROLORS

FEATURES AND BENEFITS:

- The rolls in the Gerolor set act as a roller bearing and reduce friction
- Provides smoother performance especially at less than 100 rpm
- Improved mechanical and volumetric efficiency
- Reduces wear in systems with low fluid viscosity
- Optimized drive running angle
- Easily interchangeable with other motors
- Extended motor life

NEW
HIGH PRESSURE
SHAFT SEALS
NOW AVAILABLE

Why buy a Gerotor when you can get a Gerolor for the same price?

The hydraulic motors have an advantage of small volume, high efficiency, low noise, etc. and can be used in a wide field of application such as: Construction equipment, Agricultural equipment, Plastic equipment, Mining equipment, Material Lifting equipment, Forestry equipment, Lawn and turf equipment, Machine tools and stationary equipment, Marine equipment,etc.

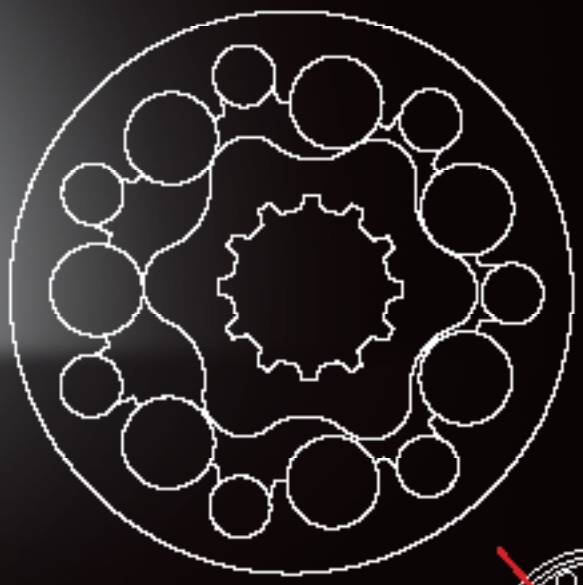

GEROLOR

GEROLOR

HYDRAULIC MOTORS OVERVIEW

Hydro Custom

THE HYDRAULIC MOTORS HAVE AN ADVANTAGE OF SMALL VOLUME, HIGH EFFICIENCY, LOW NOISE, ETC. AND CAN BE USED IN A WIDE FIELD OF APPLICATION SUCH AS: CONSTRUCTION, AGRICULTURAL, PLASTIC, MINING, MATERIAL LIFTING, FORESTRY, LAWN AND TURF, MACHINE TOOLS AND STATIONARY, MARINE, ETC.

BMM
UP TO 1950 RPM
UP TO 407 LB-IN

BMM IS A MINI-MOTOR WITH HIGH SPEED CAPABILITIES.

p.39

BM1
UP TO 879 RPM
UP TO 3845 LB-IN

BM1 IS A SMALL VOLUME, SPOOL VALVE TYPE MOTOR, WITH OPTIONAL SIDE LOAD BEARING DESIGN.
AVAILABLE IN H (EATON) AND S (DANFOSS) PORTS.
HIGH PRESSURE SHAFT SEAL UP TO 2900 PSI, AVAILABLE.

p.40

BM2 / BM2W
UP TO 755 RPM
UP TO 5613 LB-IN

BM2 IS A MEDIUM VOLUME, SPOOL VALVE TYPE MOTOR, WITH OPTIONAL SIDE LOAD BEARING DESIGN. AVAILABLE IN H (EATON) AND S (DANFOSS) PORTS. HIGH PRESSURE SHAFT SEAL UP TO 2900 PSI, AVAILABLE.

BM2W WHEEL MOTOR IS A RECESSED MOUNTING FLANGE, WITH RADIAL BEARING DESIGN, WHICH CAN BEAR A GREATER LOAD. HIGH PRESSURE SHAFT SEAL UP TO 2900 PSI, AVAILABLE.

p.42

BME
UP TO 336 RPM
UP TO 9824 LB-IN

BME MOTOR HAS ADVANCED GEROLER GEAR SET DESIGN,THEY ARE SUITED FOR HIGH PRESSURE HIGH EFFICIENCY,LOW SPEED APPLICATIONS.IT CAN KEEP HIGH VOLUME EFFICIENCY,LONG WORKING LIFE. HIGH PRESSURE SHAFT SEAL UP TO 2900 PSI, AVAILABLE.

p.44

BM5 / BM5S
UP TO 799 RPM
UP TO 6370 LB-IN

BM5 IS A LARGE VOLUME, DISC VALVE, HIGH PRESSURE MOTOR, WITH RADIAL BALL-BEARINGS DESIGN AND CAN BEAR GREATER LOAD. HIGH PRESSURE SHAFT SEAL UP TO 2900 PSI, AVAILABLE.

BM5S BEARINGLESS MOTOR IS A SHORT MOTOR DESIGN WITHOUT BEARINGS, FOR GEARBOX ASSEMBLY APPLICATIONS.

p.46

BMT
UP TO 12958 LB-IN

BMT IS OUR LARGEST VOLUME DISC VALVE HIGH PRESSURE MOTOR WITH RADIAL BALL-BEARINGS DESIGN WHICH CAN BEAR GREATER LOAD AND IS SHORTER THAN OUR **BM6**.
**SEE MOTOR CATALOGUE*

p.48

BM6 / BM6S
UP TO 775 RPM
UP TO 3852 LB-IN

BM6 IS A LARGE VOLUME, DISC VALVE, HIGH PRESSURE MOTOR, WITH RADIAL BALL-BEARINGS DESIGN AND CAN BEAR GREATER LOAD, AND HAS HIGHER TORQUE CAPABILITIES THAN OUR **BM5**.

BM6S BEARINGLESS MOTOR IS A SHORT MOTOR DESIGN WITHOUT BEARINGS, FOR GEARBOX ASSEMBLY APPLICATIONS.
**SEE MOTOR CATALOGUE*

p.50

BMV
UP TO 17813 LB-IN

BMV IS A DISC VALVE, HIGH PRESSURE MOTOR, WITH RADIAL BALL-BEARINGS DESIGN AND EFFICIENT PERFORMANCE WHICH CAN BEAR GREATER LOAD THAN BMT. ITS FIGURATION IS BIGGER THAN **BMT**.
**SEE MOTOR CATALOGUE*

p.52

HIGH SPEED MOTORS BMM SERIE

BMM SERIES MOTOR IS A MINI-MOTOR WITH HIGH SPEED, VERY COMPACT DESIGN, SPOOL VALVE, ECONOMICAL TYPE MOTOR.

CHARACTERISTIC FEATURES

- COMPACT DESIGN OF SPOOL AND GEAR SET, WHICH PROVIDE MINI VOLUME, HIGH POWER DENSITY AND LOW WEIGHT
- CREDIBLE DESIGN FOR SHAFT SEAL, WHICH CAN BEAR HIGH PRESSURE AND BE USED IN PARALLEL OR IN SERIES
- DIRECTION OF SHAFT ROTATION AND SPEED CAN BE CONTROLLED EASILY AND SMOOTHLY

BMM

DISPLACEMENT IN^3 (CM^3) / REV.		0.5 (8.2)	0.79 (12.9)	1.21 (19.9)	1.93 (31.6)	3.0 (50.3)
FLOW (GPM)	CONT.	4.2	5.2	5.2	5.2	5.2
	INT.	5.2	6.6	6.6	6.6	6.6
SPEED (RPM)	CONT.	1950	1550	1000	630	400
	INT.	2450	1940	1250	800	500
PRESSURE (PSI)	CONT.	1450	1450	1450	1450	1015
	INT.	2030	2030	2030	2030	2030
TORQUE (LB-IN)	CONT.	97	141	221	354	407
	INT.	132	203	309	504	778
POWER (HP)	CONT.	3.38	4.22	4.22	2.96	2.96
	INT.	5.92	8.29	8.29	7.1	5.92
LENGTH (IN)	L	4.09	4.17	4.29	4.45	4.80
	L2	4.13	4.21	4.33	4.53	4.84
	L3	0.14	0.22	0.34	0.53	0.85

OTHER SHAFTS & MOUNTINGS AVAILABLE UPON REQUEST

SIDE PORT

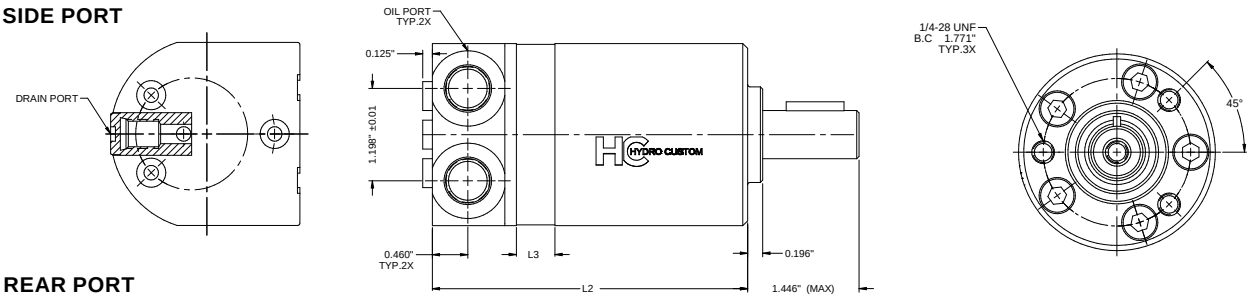

REAR PORT

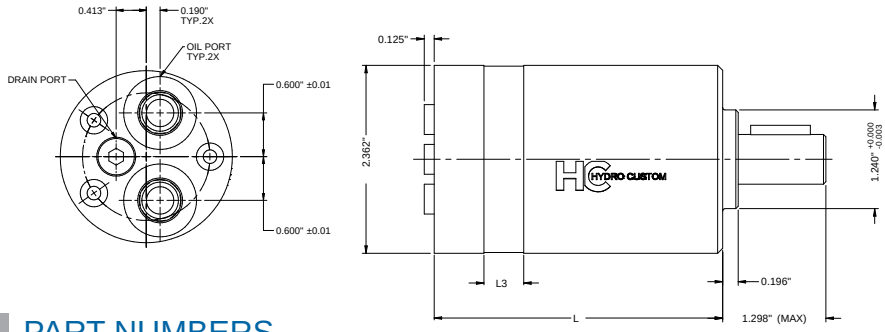

PART NUMBERS

PORT CONFIGURATION	8.2	12.9	19.9	31.6	50
	0.5	0.79	1.21	1.93	3.0
SIDE PORT	301-0050	301-0051	301-0052	301-0053	301-0055
REAR PORT	301-0060	301-0061	301-0062	301-0063	301-0065

LOW SPEED HIGH TORQUE MOTORS

Hydro Custom

BM1 SERIES MOTOR IS A SMALL VOLUME, SPOOL VALVE GEROLOR GEAR SET, ECONOMICAL TYPE MOTOR

CHARACTERISTIC FEATURES

- COMPACT DESIGN OF SPOOL AND GEAR SET, WHICH PROVIDE SMALL VOLUME, HIGH POWER AND LOW WEIGHT
- DIRECTION OF SHAFT ROTATION AND SPEED CAN BE CONTROLLED EASILY AND SMOOTHLY
- BEST COMBINATION OF EFFICIENCY AND ECONOMY IN MEDIUM LOAD APPLICATIONS
- STANDARD SHAFT SEALS RATED AT 1987 PSI
- NEW, ON MANY SERIES, HIGH PRESSURE SHAFT SEALS UP TO 2900 PSI, AVAILABLE UPON REQUEST

BM1

MAIN SPECIFICATIONS

DISPLACEMENT IN^3 (CM^3) / REV.		3.0 (50)	4.8 (80)	6.1 (100)	7.6 (125)	9.7 (160)	12.2 (200)	15.2 (250)	19.2 (315)	24.4 (400)
FLOW (GPM)	CONT.	15	15	15	15	15	15	15	15	15
	INT.	20	20	20	20	20	20	20	20	20
SPEED (RPM)	CONT.	716	750	550	450	360	280	220	189	140
	INT.	955	900	673	560	430	350	270	236	180
PRESSURE (PSI)	CONT.	2030	2030	2030	2030	2030	2030	1595	1305	1015
	INT.	2537	2537	2537	2537	2537	2537	2030	2030	1522
	PEAK	3262	3262	3262	3262	3262	3262	2610	2320	2030
TORQUE (LB-IN)	CONT.	734	1140	1423	1812	2166	2519	3182	3589	3845
	INT.	955	1503	1874	2343	3014	3448	4022	4464	4694
	PEAK	1014	1630	1990	2681	3441	3967	4113	4885	4922
POWER (HP)	CONT.	12.67	16.89	16.89	16.89	18.94	14.88	14.88	13.53	11.48
	INT.	16.73	22.31	22.31	22.31	23.68	20.3	18.94	16.91	16.89
LENGTH (IN)	L	0.35	0.57	0.70	0.91	1.14	1.46	1.81	2.24	2.84
	L1	5.63	5.81	5.95	6.14	6.38	6.69	7.07	7.50	8.07
	L2	5.83	6	6.14	6.34	6.58	6.89	7.26	7.70	8.27

PART NUMBERS

PORT CONFIGU-RATION	FLANGE	SHAFT	PORT SIZE	50	80	100	125	160	200	250	315	400
				3.0	4.8	6.1	7.6	9.7	12.2	15.2	19.2	24.4
TYPE H SIDE-LOAD BEAR-ING INCLUD-ED	2 BOLT	1" STRAIGHT	SAE-10	316-0400H	316-0402H	316-0403H	316-0409H	316-0404H	316-0405H	316-0406H	316-0408H	316-0407H
			1/2 NPT	316-0390H	316-0392H	316-0393H	316-0399H	316-0394H	316-0395H	316-0396H	316-0398H	316-0397H
		1"-6T SPLINED	SAE-10	316-0800H	316-0802H	316-0803H	316-0809H	316-0804H	316-0805H	316-0806H	316-0808H	316-0807H
			1/2 NPT	316-0820H	316-0822H	316-0823H	316-0829H	316-0824H	316-0825H	316-0826H	316-0828H	316-0827H
	4 BOLT	1" STRAIGHT	SAE-10	316-0500H	316-0502H	316-0503H	316-0509H	316-0504H	316-0505H	316-0506H	316-0508H	316-0507H
			1/2 NPT	316-0420H	316-0422H	316-0423H	316-0429H	316-0424H	316-0425H	316-0426H	316-0428H	316-0427H
		1"-6T SPLINED	SAE-10	316-0900H	316-0902H	316-0903H	316-0909H	316-0904H	316-0905H	316-0906H	316-0908H	316-0907H
			1/2 NPT	316-0920H	316-0922H	316-0923H	316-0929H	316-0924H	316-0925H	316-0926H	316-0928H	316-0927H
TYPE S	2 BOLT	1" STRAIGHT	SAE-10	313-0400	313-0402	313-0403	313-0409	313-0404	313-0405	313-0406	313-0408	313-0407
			1/2 NPT	313-0390	313-0392	313-0393	313-0399	313-0394	313-0395	313-0396	313-0398	313-0397
		1"-6T SPLINED	SAE-10	313-0800	313-0802	313-0803	313-0809	313-0804	313-0805	313-0806	313-0808	313-0807
			1/2 NPT	313-1270	313-1272	313-1273	313-1279	313-1274	313-1275	313-1276	313-1278	313-1277
	4 BOLT	1" STRAIGHT	SAE-10	313-0500	313-0502	313-0503	313-0509	313-0504	313-0505	313-0506	313-0508	313-0507
			1/2 NPT	313-0420	313-0422	313-0423	313-0429	313-0424	313-0425	313-0426	313-0428	313-0427
		1"-6T SPLINED	SAE-10	313-0900	313-0902	313-0903	313-0909	313-0904	313-0905	313-0906	313-0908	313-0907
			1/2 NPT	313-0920	313-0922	313-0923	313-0929	313-0924	313-0925	313-0926	313-0928	313-0927

ALSO AVAILABLE: OTHER SHAFT DIMENSIONS, OTHER MOUNTING FLANGES.

PORTS CONFIGURATION

H TYPE

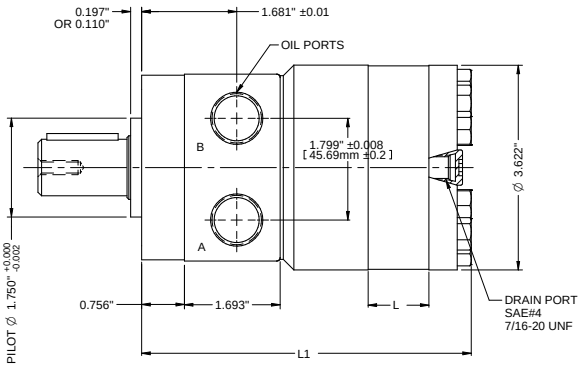

S TYPE

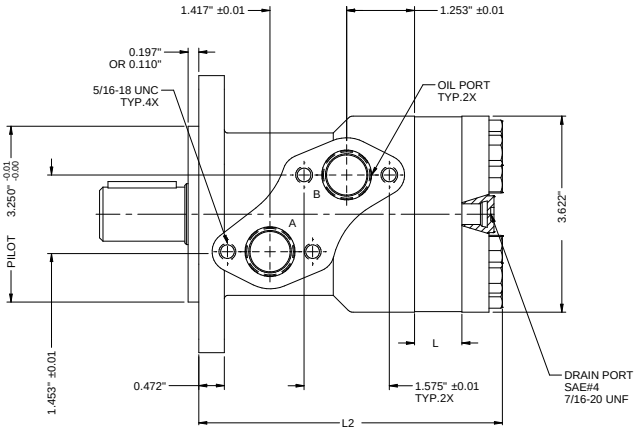

MOUNTING FLANGES

4 BOLT MOUNTING

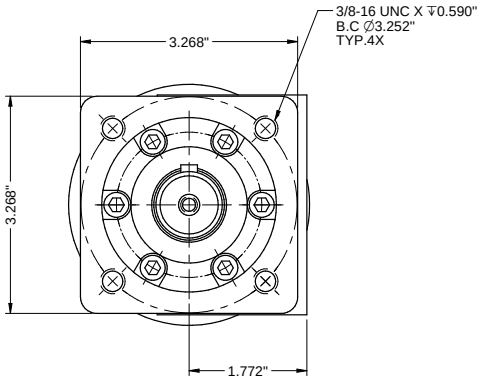

SQUARE FLANGE
4X 3/8-16 UNC BOLT ON Ø3.25”

2 BOLT MOUNTING

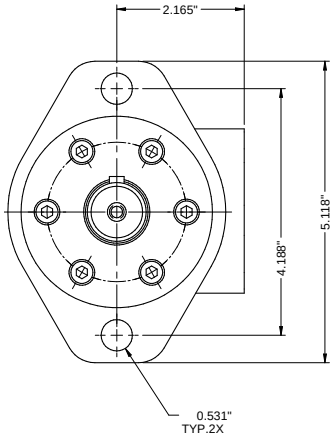

2 BOLTS FLANGE, Ø0.531’’X2
BOLT CENTER SPACE 4.188’’
PILOT Ø3.250’’ X 0.197’’’

SHAFT TYPE

1” STRAIGHT KEY

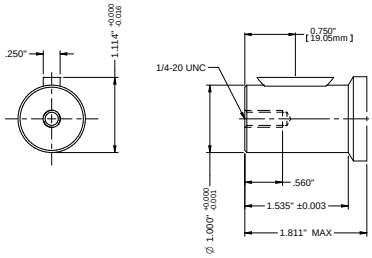

CYLINDER SHAFT : 1” X 1.535”
WOODRUFF KEY : 1” X 0.250’’
LINK THREAD : 1/4-20 UNC

1”-6T SPLINED

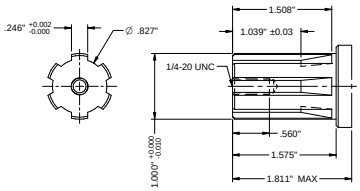

SPLINE SHAFT : 0.996” X 1.535”
0.996” X 0.846” X 0.246” 6
TEETH LINK THREAD: 1/4-20 UN C

LOW SPEED HIGH TORQUE MOTORS

HC Hydro Custom

BM2 / BM2W SERIES MOTOR IS A MEDIUM, SPOOL VALVE TYPE MOTOR, THAT CAN BEAR HIGHER PRESSURE THAN BM1.

CHARACTERISTIC FEATURES

- IT ADOPTS THE GEROLOR DESIGN
- HAS HIGHER EFFICIENCY THAN OUR BM1 SERIES
- CREDIBLE DESIGN FOR SHAFT SEAL, WHICH CAN BEAR HIGH PRESSURE AND CAN BE USED IN PARALLEL OR IN SERIES APPLICATION
- DIRECTION OF SHAFT SPEED CAN BE CONTROLLED EASILY AND SMOOTHLY
- BEST EFFICIENCY AND ECONOMY IN MEDIUM LOAD APPLICATIONS
- STANDARD SHAFT SEALS RATED AT 1987 PSI
- NEW, ON MANY SERIES, HIGH PRESSURE SHAFT SEALS UP TO 2900 PSI

BM2

BM2W

MAIN SPECIFICATIONS

DISPLACEMENT IN^3 (CM^3) / REV.		3.0 (50)	3.8 (63)	4.8 (80)	6.1 (100)	7.6 (125)	9.7 (160)	12.2 (200)	15.2 (250)	19.2 (315)	24.4 (400)	30.4 (500)
FLOW (GPM)	CONT.	10.5	10.5	15.8	15.8	15.8	15.8	15.8	15.8	15.8	15.8	15.8
	INT.	13.2	13.2	20	20	20	20	20	20	20	20	20
SPEED (RPM)	CONT.	755	630	750	600	475	375	300	240	190	160	110
	INT.	970	790	940	750	600	470	375	300	240	200	128
PRESSURE (PSI)	CONT.	2030	2030	2030	2030	2030	2392	1885	1595	1235	1235	1160
	INT.	2537	2537	2900	2900	2900	2900	2900	2900	1667	1667	1305
TORQUE (LB-IN)	CONT.	884	1105	1414	1759	2210	2829	2917	3403	3403	4287	5613
	INT.	1105	1388	1680	2122	2581	3359	3960	4844	4880	5923	6674
POWER (HP)	CONT.	13.02	4.65	21.3	21.31	21.31	21.31	18.27	16.75	13.7	13.7	13.7
	INT.	17.78	17.78	29.63	29.63	29.63	29.63	29.61	29.61	22.84	22.84	21.99
LENGTH (IN)	L	0.35	0.45	0.57	0.70	0.91	1.14	1.46	1.81	2.24	2.84	3.54
	L1	5.75	5.84	5.97	6.09	6.30	6.54	6.85	7.21	7.64	8.23	8.94
	L2	5.95	6.04	6.16	6.29	6.50	6.73	7.05	7.40	7.84	8.43	9.134
	L3	6.18	6.30	6.42	6.54	6.73	6.99	7.28	7.64	8.07	8.66	9.37

NOTES
1. CONTINUOUS DATA: THE MAX. VALUE OF OPERATING MOTOR CONTINUOUSLY.
2. INTERMITTENT DATA: THE MAX. VALUE OF OPERATING MOTOR IS 10 % PER MINUTE.
3. A SIMULTANEOUS MAX. RPM AND MAX. PRESSURE IS NOT RECOMMENDED.
4. OPTIMUM OPERATING SITUATION SHOULD BE AT THE 1/3~2/3 OF THE CONTINUOUS OPERATION.

PART NUMBERS

FLANGE	SHAFT	PORT SIZE	50	80	100	125	160	200	250	315	400	500
			3,0	4,8	6,1	7,6	9,7	12,2	15,2	19,2	24,4	30,4
2 BOLT	1" KEYED	SAE-10	322-0300	322-0302	322-0303	322-030A	322-0304	322-0305	322-0306	322-0307	322-0308	322-0309
		1/2NPT	322-0180	322-0182	322-0183	322-018A	322-0184	322-0185	322-0186	322-0187	322-0188	322-0189
4 BOLT	1" KEYED	SAE-10	322-0250	322-0252	322-0253	322-025A	322-0254	322-0255	322-0256	322-0257	322-0258	322-0259
		1/2NPT	322-0390	322-0392	322-0393	322-039A	322-0394	322-0395	322-0396	322-0397	322-0398	322-0399
WHEEL MOTOR	11/4" TAPER	SAE-10	328-0420F	328-0422F	328-0423F	328-042AF	328-0424F	328-0425F	328-0426F	328-0427F	328-0428F	328-0429F

ALSO AVAILABLE:
- OTHER SHAFT DIMENSIONS
- OTHER MOUNTING FLANGES
- SIDE LOAD BEARING

PORT CONFIGURATION

H TYPE

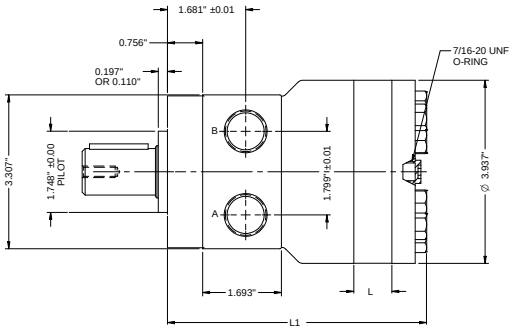

S TYPE

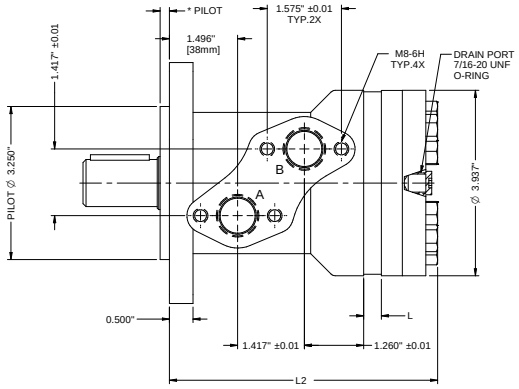

MOUNTING FLANGES

4 BOLT

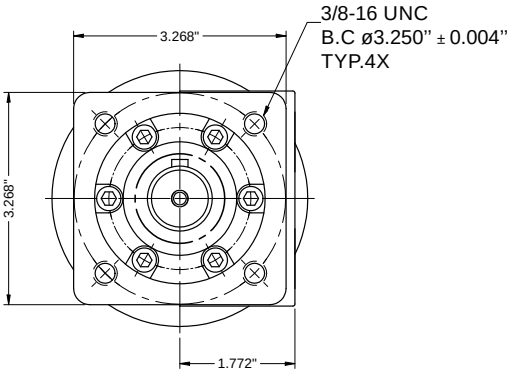

SQUARE FLANGE
4X 3/8-16 UNC BOLT ON ø3.25"

2 BOLT

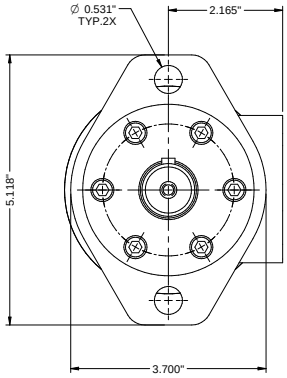

2 BOLTS FLANGE, ø0.531"X2 BOLT CENTER SPACE 4.188"
PILOT ø3.250" X 0.197"

SHAFT TYPE

1"-STRAIGHT KEY

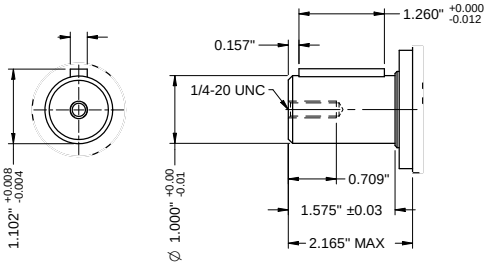

BM2W / 1 1/4" TAPERED

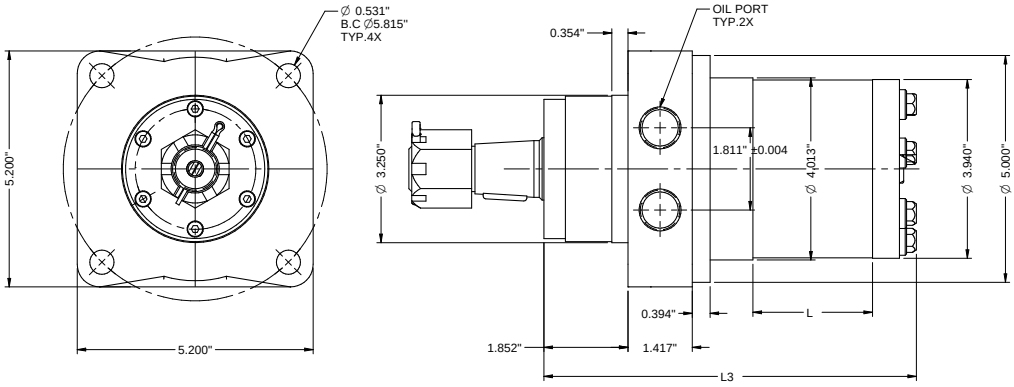

LOW SPEED HIGH TORQUE MOTORS

HC Hydro Custom

BME SERIES MOTOR HAS ADVANCED GEROLER GEAR SET DESIGN,THEY ARE SUITED FOR HIGH PRESSURE HIGH EFFICIENCY, LOW SPEED APPLICATIONS. IT CAN KEEP HIGH VOLUME EFFICIENCY, LONG WORKING LIFE.

CHARACTERISTIC FEATURES

- ADVANCED GEROLER GEAR SET DESIGN, LOW PRESSURE OF START-UP,HIGH EFFICIENCY
- HIGH PRESSURE APPLICATIONS, HIGH TORQUE.HAS NEEDLE BEARINGS DESIGN, IT CAN BEAR HIGH AXIAL AND RADIAL FORCES
- ADVANCE HIGH SPEED DISTRIBUTION FLOW DESIGN, AUTOMATICALLY COMPENSATE IN OPERATING, HIGH VOLUME EFFICIENCY, RUN SMOOTHLY AT LOW SPEED
- STANDARD SHAFT SEALS RATED AT 1987 PSI
- NEW, ON MANY SERIES, HIGH PRESSURE SHAFT SEALS UP TO 2900 PSI

BMEW WHEEL MOUNT

391-301X-F

BME 6 HOLES MAGNETO

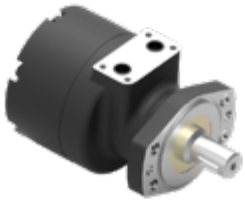

391-001XF

MAIN SPECIFICATIONS

DISPLACEMENT IN^3 (CM^3) / REV.		7.75 (125)	9.94 (160)	12.20 (200)	13.73 (230)	15.80 (250)	18.00 (300)	21.30 (350)	22.70 (375)	28.86 (475)	32.95 (540)	45.46 (750)
FLOW (GPM)	CONT.	11.89	15.85	18.49	18.49	19.81	21.13	21.13	19.81	19.81	19.81	19.81
	INT.	15.85	19.81	22.45	22.45	23.78	25.10	25.10	23.78	23.78	23.78	23.78
SPEED (RPM)	CONT.	336	350	330	290	290	250	215	200	150	140	100
	INT.	450	440	425	365	350	315	365	240	180	170	120
PRESSURE (PSI)	CONT.	2973	2973	2973	2973	2973	2973	2973	2973	2538	2030.5	1523
	INT.	3480	3480	3480	3480	3480	3480	3480	3480	2756	2538	1740
TORQUE (LB-IN)	CONT.	3088.91	4159.85	4708.60	5531.72	6195.53	7169.11	8009.93	8762.24	9824.33	8673.74	9293.29
	INT.	3611.11	4850.21	5328.15	6284.03	6992.09	8231.20	9160.53	10089.86	10691.71	10974.93	10443.89
POWER (HP)	CONT.	16.47	23.10	24.65	25.45	28.51	28.44	27.33	27.81	23.38	19.27	14.75
	INT.	25.78	33.86	35.93	36.39	38.83	41.14	53.05	38.42	30.54	29.60	19.89
LENGTH (MM)	L	154	158	161	163	166	170	174	176	185	191	209

NOTE: 1. CONTINUOUS DATA: THE MAX. VALUE OF OPERATING MOTOR CONTINUOUSLY.
2. INTERMITTENT DATA: THE MAX. VALUE OF OPERATING MOTOR IN 6 SECONDS PER MINUTE.
3. A SIMULTANEOUS MAX. RPM AND MAX. PRESSURE IS NOT RECOMMENDED.
4. OPTIMUM OPERATING SITUATION SHOULD BE AT THE 1/3~2/3 OF THE CONTINUOUS OPERATING SITUATION.

DIMENSIONS

BMEW WHEEL MOUNT

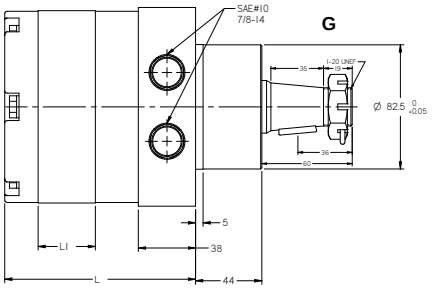

MOUNTING FLANGES

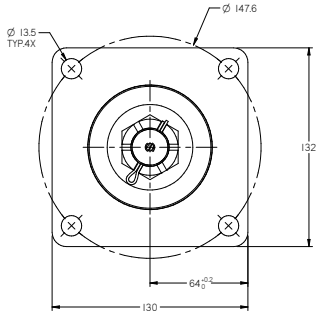

BME 6 HOLES MAGNETO

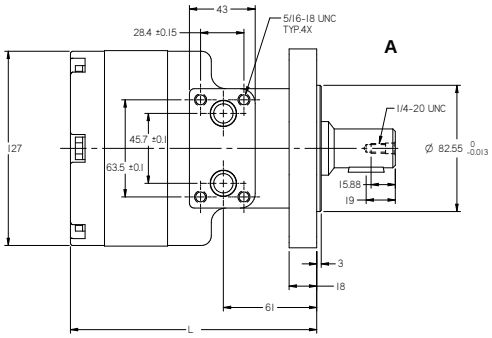

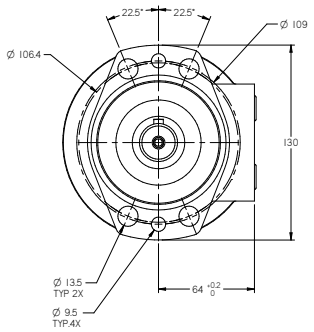

SHAFT TYPE

A

1 1/4" STRAIGHT KEY

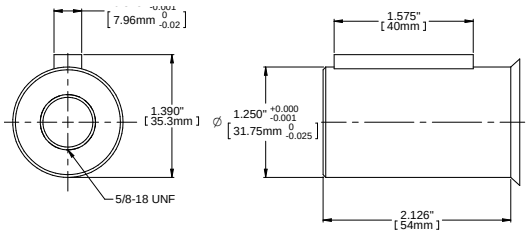

CYLINDER SHAFT: ∅31.75mm X 54mm
PARALLEL KEY: 7.96mm X 7.96mm X 40mm
LINK THREAD: 5/8-18 UNF

B

1 1/4"-14T SPLINED

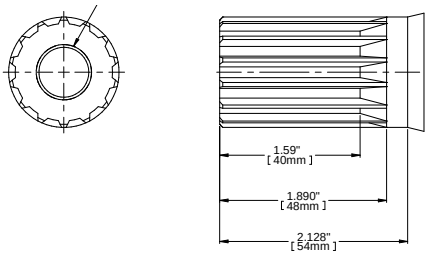

INVOLUTE SPLINE SHAFT: ∅31.75mm X 54mm
14 TEETH, DP13/24
LINK THREAD: 5/8-18 UNF

E

1" STRAIGHT KEY

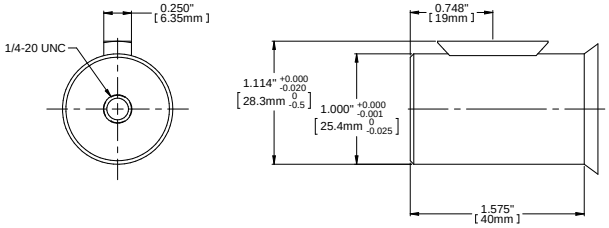

CYLINDER SHAFT: ∅25.4mm X 39mm
WOODRUFF KEY: ∅25.4mm X 6.35mm
LINK THREAD: 1/4-20 UNC

G

1 1/4" TAPERED

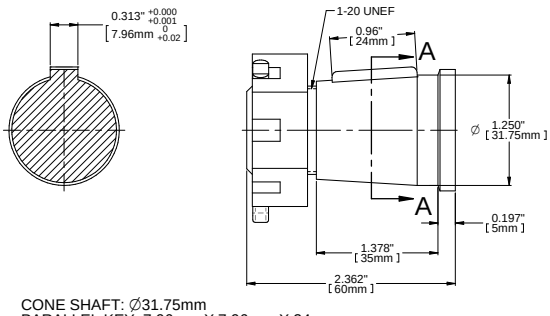

CONE SHAFT: ∅31.75mm
PARALLEL KEY: 7.96mm X 7.96mm X 24mm
LINK THREAD: 1-20 UNEF
TAPAER 1:8

LOW SPEED HIGH TORQUE MOTORS

Hydro Custom

BM5 IS A LARGE VOLUME, DISC VALVE, HIGH PRESSURE MOTOR WITH RADIAL BEARINGS DESIGN AND CAN BEAR GREATER LOAD.

• HIGH PRESSURE SHAFT SEAL UP TO 2900 PSI AVAILABLE

BM5

MAIN SPECIFICATIONS

DISPLACEMENT IN^3 (CM^3) / REV.		4.8 (80)	6.1 (100)	7.6 (125)	9.7 (160)	12.2 (200)	15.2 (250)	18.59 (305)	24.4 (400)	30.4 (500)
FLOW (GPM)	CONT.	20	20	20	20	20	20	20	20	20
	INT.	22	25	25	30	30	30	30	30	30
SPEED (RPM)	CONT.	799	742	576	460	365	294	246	183	148
	INT.	908	924	720	713	577	462	365	287	230
PRESSURE (PSI)	CONT.	2980	3045	3045	3045	3045	2900	2900	2320	1740
	INT.	4350	4350	4350	3770	3770	3770	3480	2465	2030
	PEAK	4350	4350	4350	4350	4350	4350	4350	2900	2465
TORQUE (LB-IN)	CONT.	2033	2564	3182	4058	4791	5658	5967	7337	7470
	INT.	2555	3359	4243	4685	5622	6895	6851	8044	8398
	PEAK	2917	3713	4774	4818	5834	7205	8212	8840	9061
POWER (HP)	CONT.	27.76	28.76	28.76	16.91	16.91	16.91	11.84	11.84	11.84
	INT.	50.75	50.75	50.75	33.95	35.95	35.53	29.6	29.95	25.37
LENGTH (IN)	L	0.59	0.73	0.90	1.14	1.41	1.77	2.20	2.83	3.56
	L3	7.08	7.22	7.40	7.64	7.91	8.27	8.70	9.33	10.25

NOTES 1. CONTINUOUS DATA: THE MAX. VALUE OF OPERATING MOTOR CONTINUOUSLY.
2. INTERMITTENT DATA: THE MAX. VALUE OF OPERATING MOTOR IS 10 % PER MINUTE.
3. A SIMULTANEOUS MAX. RPM AND MAX. PRESSURE IS NOT RECOMMENDED.
4. OPTIMUM OPERATING SITUATION SHOULD BE AT THE 1/3~2/3 OF THE CONTINUOUS OPERATION.

PART NUMBERS

FLANGE	SHAFT	80	100	125	160	200	250	315	400	500
		4,8	6,1	7,6	9,7	12,2	15,2	19,2	24,4	30,4
SAE A 4 BOLT	1 1/4" STRAIGHT	351-0571	351-0572	351-0573	351-0574	351-0575	351-0576	351-0577	351-0578	351-0570
	1 1/4" SPLINED	351-2031	351-2032	351-2033	351-2034	351-2035	351-2036	351-2037	351-2038	351-2030
	1" STRAIGHT	351-0581	351-0582	351-0583	351-0584	351-0585	351-0586	351-0587	351-0588	351-0580
	1" SPLINED	351-1301G	351-1302G	351-1303G	351-1304G	351-1305G	351-1306G	351-1307G	351-1308G	351-1300G
MAGNETO MOUNT	1 1/4" STRAIGHT	351-0211	351-0212	351-0213	351-0214	351-0215	351-0216	351-0217	351-0218	351-0210
	1 1/4" SPLINED	351-2111	351-2112	351-2113	351-2114	351-2115	351-2116	351-2117	351-2118	351-2110
	1" STRAIGHT	351-0651	351-0652	351-0653	351-0654	351-0655	351-0656	351-0657	351-0658	351-0650
	1" SPLINED	351-1121	351-1122	351-1123	351-1124	351-1125	351-1126	351-1127	351-1128	351-1120
WHEEL MOTOR	1 1/4" TAPERED	351-3141	351-3142	351-3143	351-3144	351-3145	351-3146	351-3147	351-3148	351-3140

ALSO AVAILABLE:
• OTHER SHAFT DIMENSIONS
• OTHER MOUNTING FLANGES

DIMENSIONS

BM5

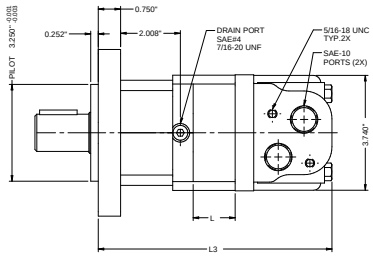

BM5W

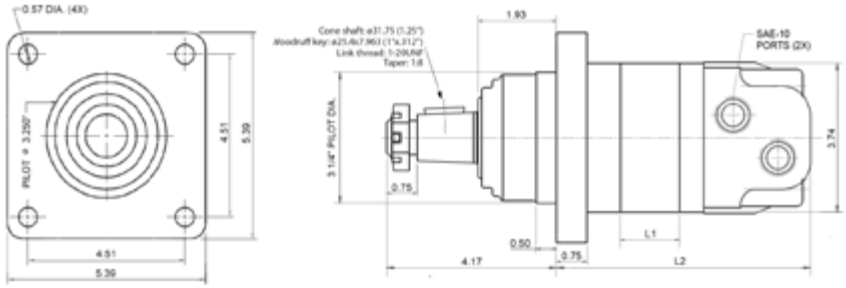

MOUNTING FLANGES

SAE A - 4 BOLT

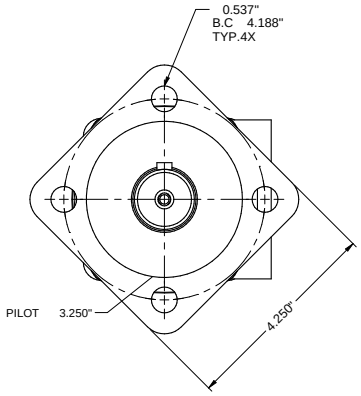

MAGNETO - 6 BOLT

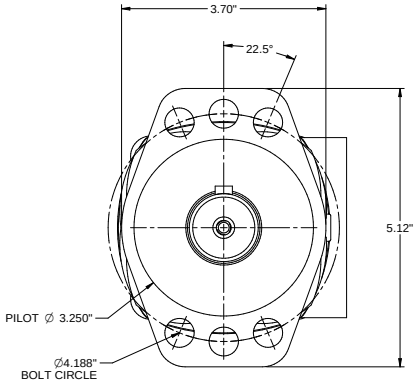

SHAFT TYPE

1 1/4" STRAIGHT KEY

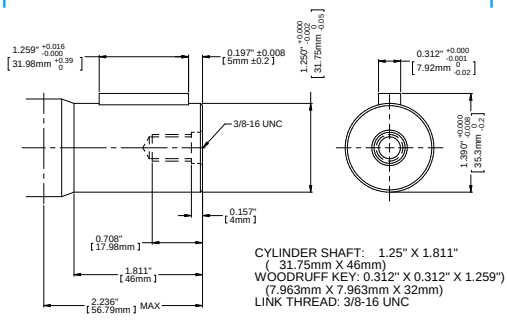

1 1/4"-14T SPLINED

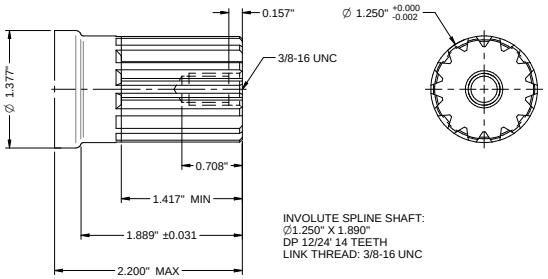

1" STRAIGHT KEY

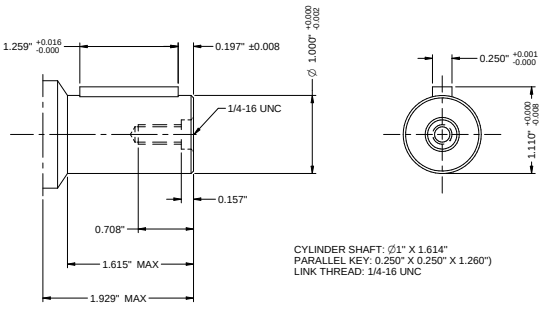

1"-6T SPLINED

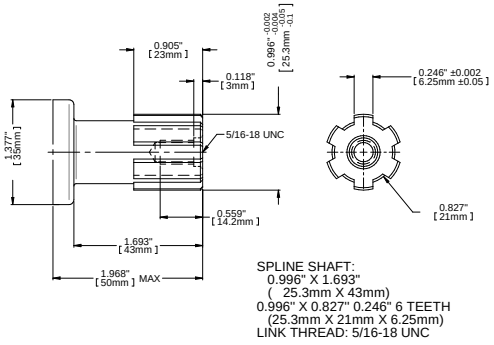

LOW SPEED HIGH TORQUE MOTORS

Hydro Custom

BMT IS A LARGE VOLUME DISC VALVE, HIGH PRESSURE MOTOR, WITH RADIAL BALL-BEARINGS DESIGN, AND CAN BEAR GREATER LOAD.

CHARACTERISTIC FEATURES

- THE MOTOR CAN BE USED IN HIGH PRESSURE AND HIGH TORQUE
- ADVANCED DESIGN IN DISC DISTRIBUTION FLOW, WHICH CAN PROVIDE IMPROVED PERFORMANCE AT LOW SPEED
- THE VALVE CAN AUTOMATICALLY COMPENSATE FOR THE WEAR, SO THE VOLUMETRIC EFFICIENCY IS HIGH
- DOUBLE TAPER ROLLER BEARINGS PERMIT HIGH RADIAL LOADS. THE MOTORS CAN BE USED ON HEAVIER VEHICLES IN TRACTION DRIVE APPLICATIONS

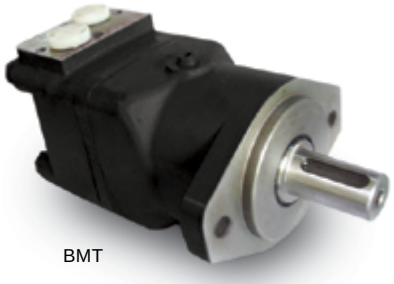

BMT

MAIN SPECIFICATIONS

DISPLACEMENT IN^3 (CM^3) / REV.		15.2 (250)	19.2 (315)	24.3 (400)	30.4 (500)	38.4 (630)	48.7 (800)
FLOW (GPM)	CONT.	33	33	33	33	33	33
	INT.	40	40	40	40	40	40
SPEED (RPM)	CONT.	495	380	302	237	196	154
	INT.	592	458	364	284	233	185
PRESSURE (PSI)	CONT.	2900	2900	2600	2320	2030	1812
	INT.	3480	3480	3045	2610	2320	1885
TORQUE (LB-IN)	CONT.	6435	8515	9691	11020	11665	12958
	INT.	7860	10214	11231	12471	13258	13453

NOTES
1. CONTINUOUS DATA: THE MAX. VALUE OF OPERATING MOTOR CONTINUOUSLY.
2. INTERMITTENT DATA: THE MAX. VALUE OF OPERATING MOTOR IN 6 SECONDS PER MINUTE.
3. A SIMULTANEOUS MAX. RPM AND MAX. PRESSURE IS NOT RECOMMENDED.
4. THE CONVERSION FACTORS IS ON THE PAGE 4, CONSULT IT PLEASE.
5. OPTIMUM OPERATING SITUATION SHOULD BE AT THE 1/3~2/3 OF THE CONTINUOUS OPERATING SITUATION.

DIMENSIONS

BMT

CONFIGURATION A: STANDARD TYPE

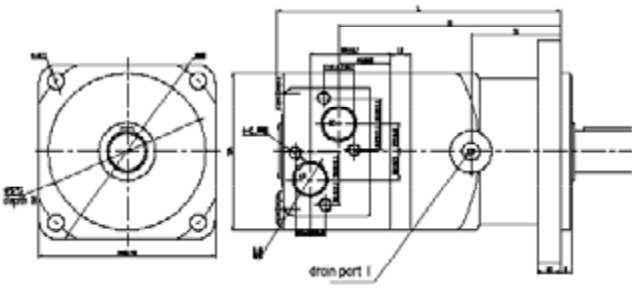

CONFIGURATION B:

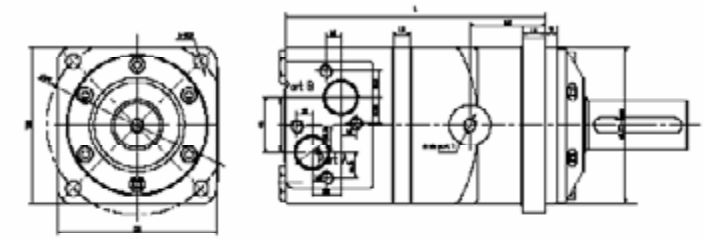

CONFIGURATION C:

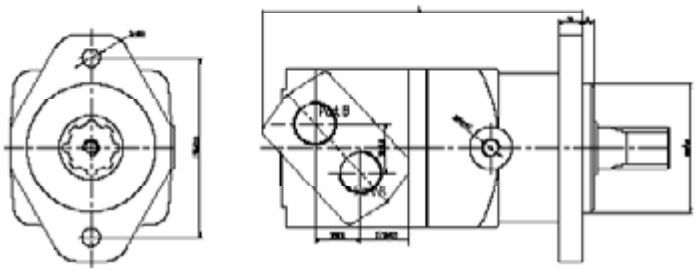

DIMENSION (MM)	L	L1	L2
250	227.5	178	14.7
315	233.5	183.5	20.3
400	240.5	191	27.5
500	248.5	199	35.5
630	259.5	209.5	47.4
800	275	225	62

MOUNTING FLANGES

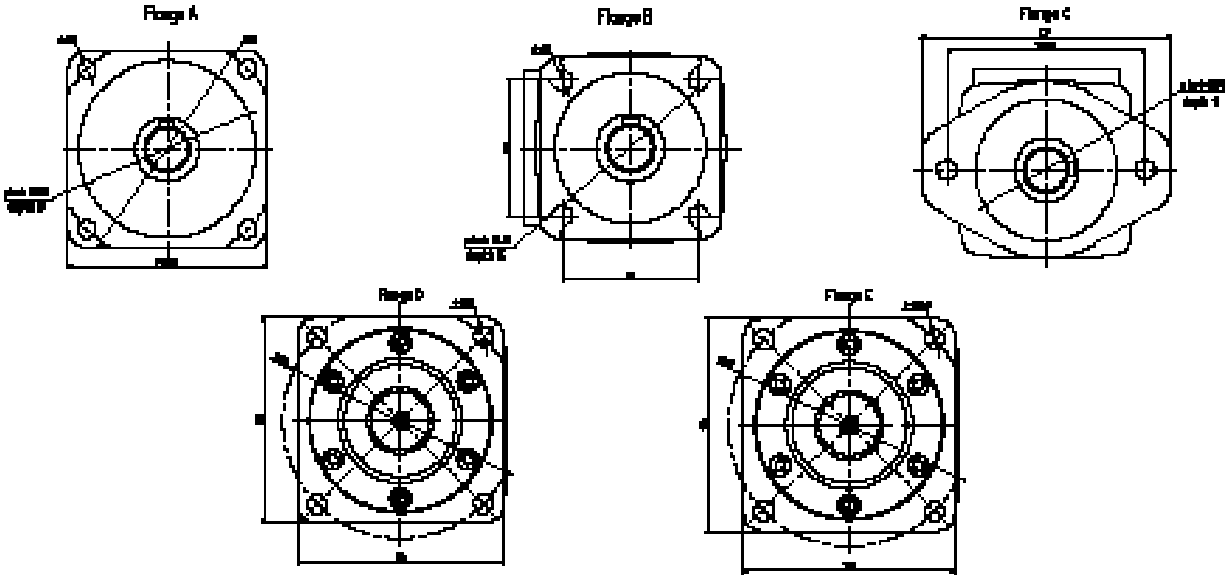

SHAFT TYPE

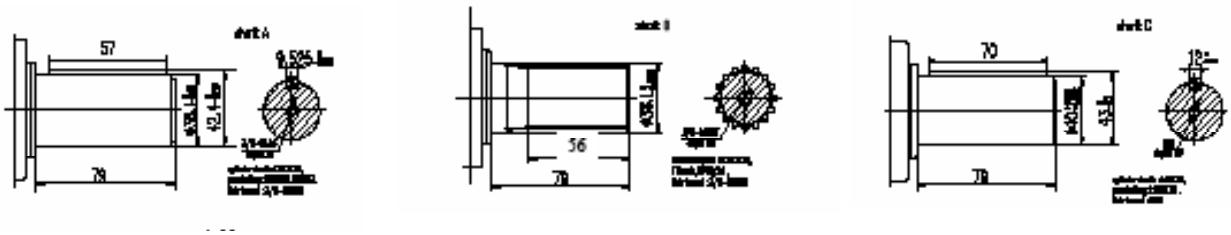

LOW SPEED HIGH TORQUE MOTORS

BM6 IS A LARGE VOLUME, DISC VALVE, HIGH PRESSURE MOTOR, WITH RADIAL BALL-BEARINGS DESIGN AND CAN BEAR GREATER LOAD, AND HAS HIGHER TORQUE CAPABILITIES THAN OUR **BM5**

CHARACTERISTIC FEATURES

- THE MOTOR CAN BE USED IN HIGH PRESSURE AND HIGH TORQUE
- ADVANCED DESIGN IN DISC DISTRIBUTION FLOW,WHICH CAN PROVIDE IMPROVED PERFORMANCE AT LOW SPEED
- THE VALVE CAN AUTOMATICALLY COMPENSATE FOR THE WEAR, SO THE VOLUMETRIC EFFICIENCY IS HIGH
- DOUBLE TAPER ROLLER BEARINGS PERMIT HIGH RADIAL LOADS. THE MOTORS CAN BE USED ON HEAVIER VEHICLES IN TRACTION DRIVE APPLICATIONS

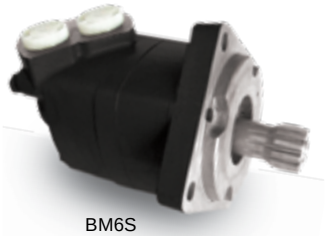

BM6S

BM6

MAIN SPECIFICATIONS

DISPLACEMENT IN^3 (CM^3) / REV.		11.8 (195)	14.9 (245)	18.9 (310)	24.00 (395)	29.8 (490)	38.1 (625)	48.7 (800)	60.0 (985)
FLOW (GPM)	CONT.	40	40	40	40	40	40	40	40
	INT.	45	55	60	60	60	60	60	60
SPEED (RPM)	CONT.	775	615	485	383	307	241	184	153
	INT.	866	834	698	563	454	355	276	230
PRESSURE (PSI)	CONT.	2975	2975	2975	2975	2450	2030	1740	1740
	INT.	4500	4500	4500	4500	3990	2465	2030	2030
TORQUE (LB-IN)	CONT.	5083	6497	8212	10051	10723	11731	12483	13852
	INT.	7602	10440	11934	14453	16619	12155	14551	16540
LENGTH (IN)	L1	9.055	1.004	9.567	9.961	10.354	10.906	11.732	12.480
	L2	9.646	9.862	10.146	10.551	10.925	11.496	12.323	13.071
	L3	10.157	10.345	10.630	11.024	11.417	12.008	12.835	13.583
	L4	10.028	10.248	10.535	10.882	11.315	11.894	12.717	13.457
	L5	10.472	10.669	10.945	11.339	11.732	12.323	13.110	13.858

NOTES 1. CONTINUOUS DATA: THE MAX. VALUE OF OPERATING MOTOR CONTINUOUSLY.
2. INTERMITTENT DATA: THE MAX. VALUE OF OPERATING MOTOR IN 6 SECONDS PER MINUTE.
3. A SIMULTANEOUS MAX. RPM AND MAX. PRESSURE IS NOT RECOMMENDED.
4. THE CONVERSION FACTORS IS ON THE PAGE 4, CONSULT IT PLEASE.
5. OPTIMUM OPERATING SITUATION SHOULD BE AT THE 1/3~2/3 OF THE CONTINUOUS OPERATING SITUATION.

DIMENSIONS

BM6

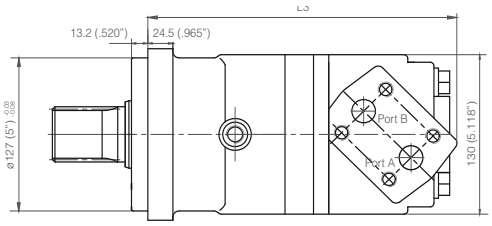

BM6S

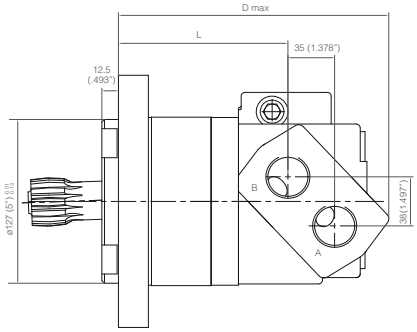

MOUNTING FLANGES

Flange A

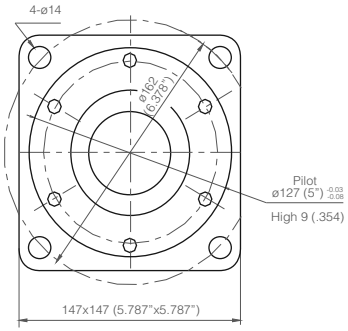

Flange F

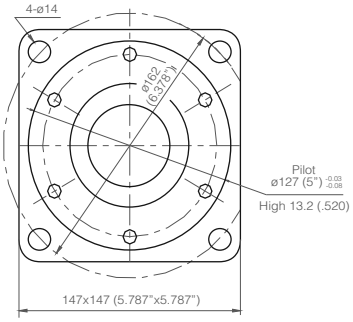

Flange A

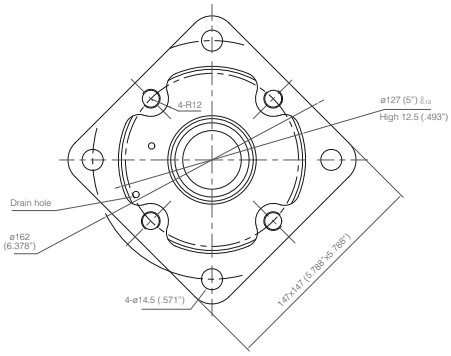

SHAFT TYPE

Shaft A

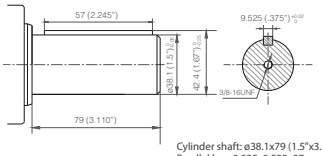

Cylinder shaft: ø38.1x79 (1.5"x3.110")
Parallel key: 9.525x9.525x57 (.375"x.375"x2.245")
Link thread: 3/8-16UNC

Shaft B

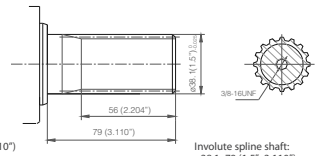

Involute spline shaft:
ø38.1x79 (1.5"x3.110"),
17 teeth, DP12/24
Link thread: 3/8-16UNC

Shaft B

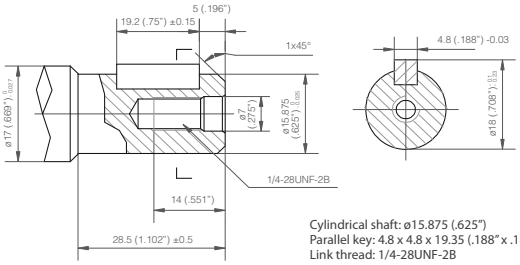

Cylindrical shaft: ø15.875 (.625")
Parallel key: 4.8 x 4.8 x 19.35 (.188" x .188" x .761")
Link thread: 1/4-28UNF-2B

Shaft D

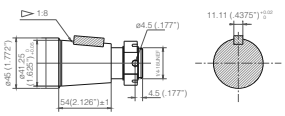

Cone shaft: ø41.25 (1.625")
Parallel key: 11.11x11.11x32 (.4375"x.4375"x1.260")
Link thread: 1-1/4-18UNEF
Taper: 1:8

Shaft E

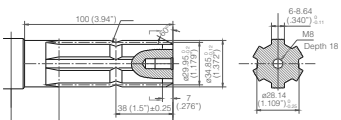

Rectangle spline shaft:
ø34.85x76 (1.372"x2.994")
6-34.85x28.14x8.64
(1.372"x1.109"x.340")
Link thread: M8

Shaft C

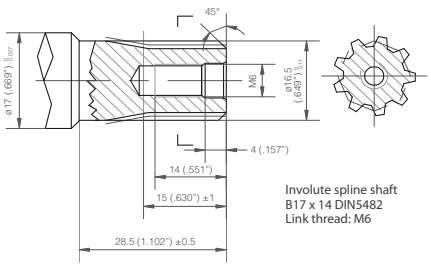

Involute spline shaft
B17 x 14 DIN5482
Link thread: M6

LOW SPEED HIGH TORQUE MOTORS

Hydro Custom

BMV IS A DISC VALVE, HIGH PRESSURE MOTOR, WITH RADIAL BALL-BEARINGS DESIGN AND EFFICIENT PERFORMANCE WHICH CAN BEAR GREATER LOAD THAN BMT. ITS FIGURATION IS BIGGER THAN **BMT**.

CHARACTERISTIC FEATURES

- THE MOTOR CAN BE USED IN HIGH PRESSURE AND HIGH TORQUE
- ADVANCED DESIGN IN DISC DISTRIBUTION FLOW,WHICH CAN PROVIDE IMPROVED PERFORMANCE AT LOW SPEED
- THE VALVE CAN AUTOMATICALLY COMPENSATE FOR THE WEAR, SO THE VOLUMETRIC EFFICIENCY IS HIGH
- DOUBLE TAPER ROLLER BEARINGS PERMIT HIGH RADIAL LOADS. THE MOTORS CAN BE USED ON HEAVIER VEHICLES IN TRACTION DRIVE APPLICATIONS

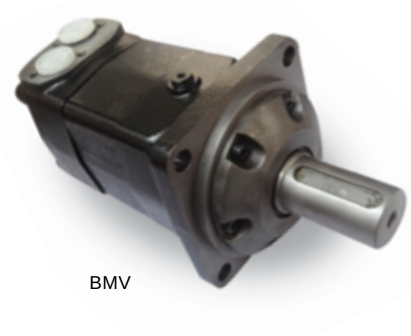

BMV

MAIN SPECIFICATIONS

DISPLACEMENT IN³ (CM³) / REV.		19.2 (315)	24.3 (400)	30.4 (500)	38.4 (630)	48.7 (800)	60.9 (1000)
FLOW (GPM)	CONT.	42	53	53	53	53	53
	INT.	53	63	63	63	63	63
SPEED (RPM)	CONT.	510	500	400	320	250	200
	INT.	630	600	480	380	300	240
PRESSURE (PSI)	CONT.	3045	3045	3045	3045	3045	3045
	INT.	3625	3625	3625	3625	3625	3625
TORQUE (LB-IN)	CONT.	7213	10502	13039	14869	15824	17813
	INT.	9892	12659	15611	17371	17689	20155
LENGHT (IN)	L1	0.937	1.220	1.535	2.004	2.579	3.209
	L2	6.370	6.654	6.969	7.437	8.012	8.642
	L	8.378	8.661	8.976	9.445	10.020	10.650

NOTES
1. CONTINUOUS DATA: THE MAX. VALUE OF OPERATING MOTOR CONTINUOUSLY.
2. INTERMITTENT DATA: THE MAX. VALUE OF OPERATING MOTOR IN 6 SECONDS PER MINUTE.
3. A SIMULTANEOUS MAX. RPM AND MAX. PRESSURE IS NOT RECOMMENDED.
4. THE CONVERSION FACTORS IS ON THE PAGE 4, CONSULT IT PLEASE.
5. OPTIMUM OPERATING SITUATION SHOULD BE AT THE 1/3~2/3 OF THE CONTINUOUS OPERATING SITUATION.

DIMENSIONS

BMV

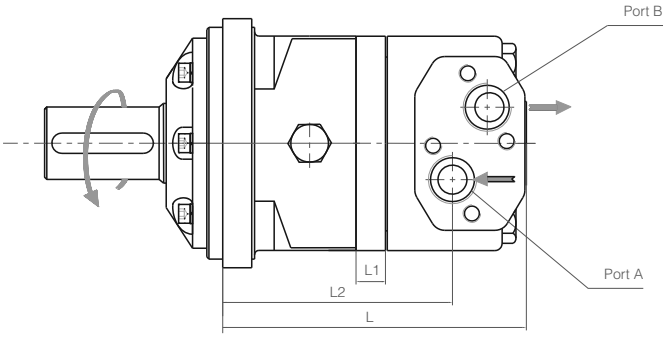

MOUNTING FLANGES

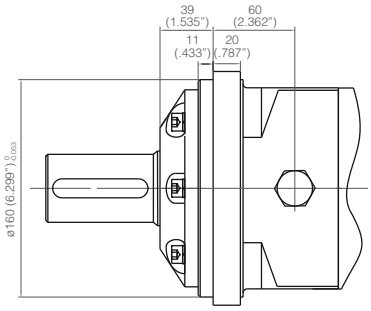

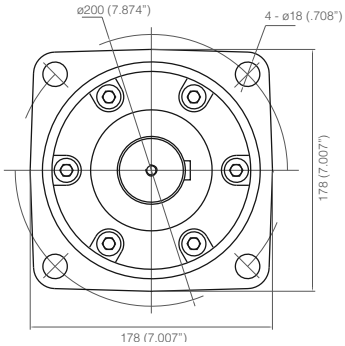

SHAFT TYPE

Shaft A

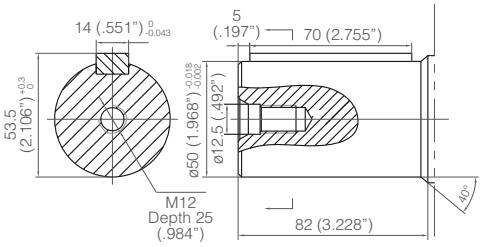

Cylinder shaft: ø50 (1.968")
Parallel key: 14x9x70 (.551"x.354"x2.755")
Link thread: M12

Shaft B

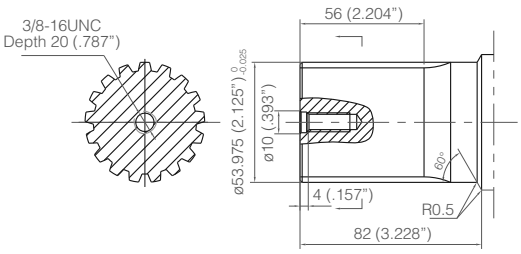

Involute spline shaft: ø53.975 (2.125"),
16 teeth, DP8/16, Effective length 56 (2.204")
Link thread: 3/8-16UNC Depth 20 (.787")

Shaft D

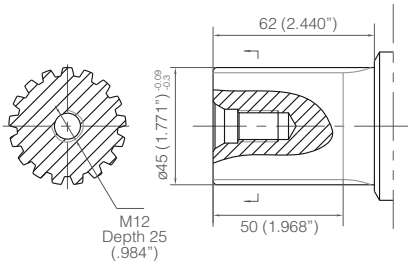

Involute spline shaft: ø45x62 (1.771"x2.440"),
17 teeth, m2.5, Effective length 50 (1.968")
Link thread: M12 Depth 25 (.984")

Shaft E

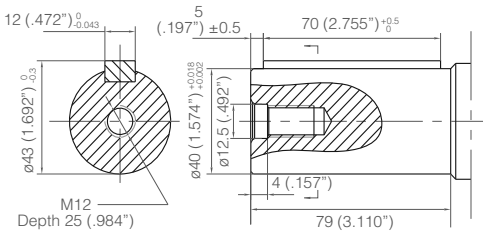

Cylinder shaft: ø40x79 (1.574"x3.110")
Parallel key: 12x8x70 (.472"x.123"x2.755")
Link thread: M12 Depth 25 (.984")

BM2B BRAKE MOTOR

BM2B BRAKE MOTOR IS DESIGNED WITH BRAKE DEVICE, SHUTTLE VALVE, INTERNAL CONTROL OIL LOOP. COMPACT DESIGN FOR SMALL VOLUME AND EASY INSTALLATION.

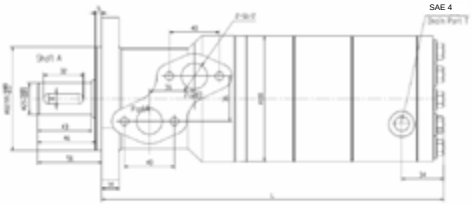

DISPLACEMENT CM³ / REV.	80	100	125	160	200	250	315
RELEASE PRESSURE (PSI)	188-246	188-246	188-246	320-375	320-375	320-375	320-375
BRAKE TORQUE (Nm) (LB-IN)	<=300 <=2655	<=300 <=2655	<=300 <=2655	<=500 <=4425	<=500 <=4425	<=500 <=4425	<=500 <=4425
MAX PRESSURE (PSI)	2030	2030	2030	2030	2030	1595	1305
MAX FLOW (GPM)	13	13	13	13	13	13	13

NOTES:
1. ALWAYS WORK WITHIN PRESSURE RANGE
2. THE DRAIN PORT SHOULD BE CONNECTED WITH THE RETURN LOOP
3. THE BRAKE SHOULD ONLY BE APPLIED IN STATIC STATE, DYNAMIC STATE IS NOT PERMITTED
4. MAX. OPERATING TEMPERATURE: 80°C
5. RECOMMENDED FLUID : ANTI-WEAR TYPE OF HYDRAULIC OIL.VISCOSITY : ABOVE 13CST IN OPERATING

BM6B BRAKE MOTOR

BM6B MOTOR IS A BM6 WITH MULTI-DISC BRAKE WHICH RELEASES USING HYDRAULIC PRESSURE. THE MOTOR HAS THE SAME WORK PERFORMANCE AS A REGULAR BM6 WHEN THE BRAKE IS RELEASED.

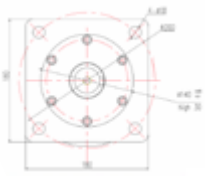

DISPLACEMENT CM³ / REV.	195	245	310	395	490	625
RELEASE PRESSURE (PSI)	362	362	362	362	362	362
BRAKE TORQUE (N.M) (LB-IN)	<=800 <=1080	<=800 <=1080	<=800 <=1080	<=800 <=1080	<=800 <=1080	<=800 <=1080
MAX PRESSURE (PSI)	2975	2975	2975	2975	2465	2465
MAX FLOW (GPM)	40	40	40	40	40	40

NOTES :
1. ALWAYS WORK WITHIN PRESSURE RANGE
2. THE DRAIN PORT MUST BE CONNECTED TO THE RETURN CIRCUIT
3. THE BRAKE SHOULD ONLY BE APPLIED IN STATIC STATE, DYNAMIC STATE IS NOT PERMITTED
4. IF THE SYSTEM HAS PILOT PUMP,USE PILOT OIL TO OPEN THE BRAKE, OTHERWISE, THE WORKING PRESSURE SHOULD NOT EXCEED 2175 PSI
5. THE OIL TEMPERATURE SHOULD NOT EXCEED 80°C
6. RECOMMENDED FLUID : ANTI-WEAR TYPE OF HYDRAULIC OIL.VISCOSITY : ABOVE 13CST IN OPERATING

ZD80 HYDRAULIC BRAKES TO INSTALL ON MOTORS

ZD 80 AND ZD 100 SERIES HYDRAULIC BRAKES ARE MULTI-DISC BRAKE DESIGN. THEY ARE WIDELY APPLIED IN HEAVY LOAD MACHINES SUCH AS; CRANES, AGRICULTURAL MACHINES, ENVIRONMENTAL SANITATION MACHINES, ETC.

CHARACTERS:

1. MULTI-DISC BRAKE TYPE
2. COMPACT DESIGN
3. EXCELLENT PERFORMANCE
4. ZD HYDRAULIC BRAKES CAN BE INDEPENDENTLY USED WITHOUT MOTORS
5. LOW NOISE
6. EASY TO INSTALL

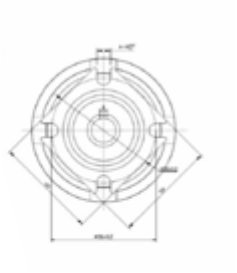

MAIN SPECIFICATION

ITEM	ZD80	ZD100
MIN STATIC TORQUE (LB-IN)	3982	4865
MIN OPENING PRESSURE (PSI)	362	
MAX OPENING PRESSURE (PSI)	4350	
MIN OIL QUANTITY FOR BRAKE RELEASING (CC)	7-8	
OIL VOLUME (CC)	50-120	
MAX PRESSURE IN DRAIN SPACE (PSI)	7	

PART NUMBER	FEMALE	MALE	MOUNTING FLANGE
ZD80-A014	1”-6T SPLINE	1” KEY	SAE-A 2/4 BOLTS
ZD80-A024		1”-6T SPLINE	

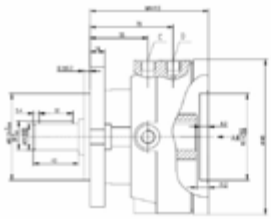

BTM

SPRING LOADED DISC BRAKES

FEATURES:

- BRAKING TORQUE UP TO 520 NM *(383,2 LB-FT)*
- SUITABLE FOR DIFFERENT INPUT / OUTPUT SHAFTS AND FLANGES

BRAKE MODEL	STATIC TORQUE N-M (*LB-FT*)	MAXIMUM PILOT PRESSURE PSI	MINIMUM COMPLETE OPENING PRESSURE PSI	WEIGHT KG (*LB*)
BTM 03	30 *(22.1)* - 40 *(29.5)*	*5075*	*44 - 73*	9,5 *(21)*
BTM 07	60 *(44.2)* - 80 *(59.0)*		*58 - 87*	
BTM 11	100 *(73.7)* - 120 *(88.4)*		*102 - 131*	
BTM 18	170 *(125.3)* - 190 *(140.0)*		*160- 189*	
BTM 24	230 *(169.5)* - 250 *(184.3)*			
BTM 32	320 *(235.8)* - 330 *(243.2)*		*218 - 247*	
BTM 42	400 *(294.8)* - 440 *(324.3)*			
BTM 50	480 *(353.8)* - 520 *(383.2)*		*247 - 276*	

CROSSOVER RELIEF VALVES

- MADE TO ABSORB PEAK OF PRESSURE
- COMPACT DESIGN
- FITS MANY MANUFACTURERS

PART NUMBER	FITS ON MOTORS	PSI RANGE	PORT
469-8210	BMM	500-2000	SAE 6
460-2100	BM1/BM2	725-1450	SAE 10
460-2210	BM1/BM2	1000-3000	
465-1210	BM5	1000-3000	

FOR HMM

FOR BM1 & BM2

FOR BM5

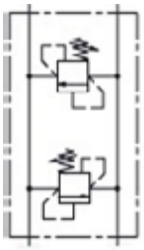

INTEGRATED COUNTERBALANCE VALVES

- MADE TO SMOOTLHY BRAKE ROTATION
- FITS ON BM1 & BM2 MOTORS- INTEGRATE A
- SHUTTLE TO SEND A SIGNAL/OIL

CUB 1281

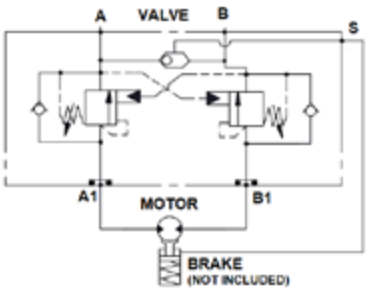

STEERING COLUMNS

- FITS ALSO ON MOST COMMON DANFOSS & CHARLYNN UNITS

PART NUMBER	LENGHT (IN)
651-1579-S	6
650-1500-S	8
651-1504-S	16

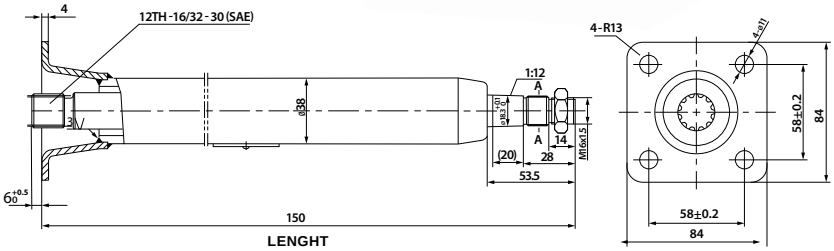

STEERING UNITS

MODEL CODE

EXEMPLE 060 X XX X X

- 060 → DESIGN
- X → FONCTION
- XX → PORTS & LINK THREAD
- X → DISPLACEMENT
- X → INTEGRATED VALVES MODEL AVAILABLE

FONCTION

1 SCHEMA OPEN CENTER NON-REACTION

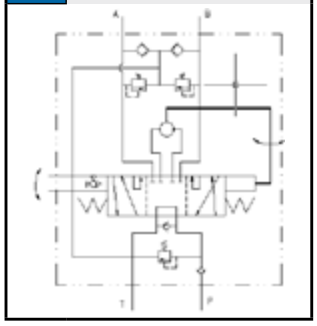

3 SCHEMA CLOSED CENTER NON-REACTION

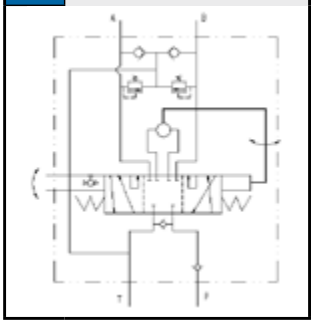

5 SCHEMA STATIC SIGNAL LOAD SENSING TYPE

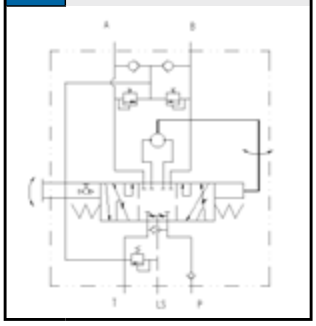

7 SCHEMA DYNAMIC SIGNAL LOAD SENSING TYPE

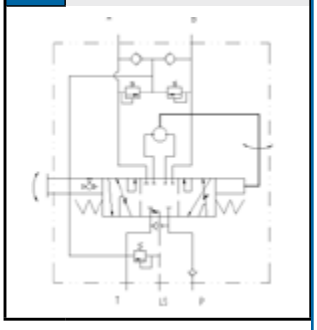

PORT & LINK THREADS

CODE	PORT (M)	COLUM MOUNTING THREAD	LINKED THREAD ON PORT SURFACE (V)	LOAD SENSING PORTS (LS)
33	3/4-16UNF 'O'-ring	3/8-16UNC	3/8-24UNF	7/16-20'O'-ring
38	9/16-18UNF'O'-ring	3/8-16UNC	M12X1.75	7/16-20'O'-ring
44	3/4-16UNF 'O'-ring	3/8-16UNC	M12X1.75	7/16-20'O'-ring

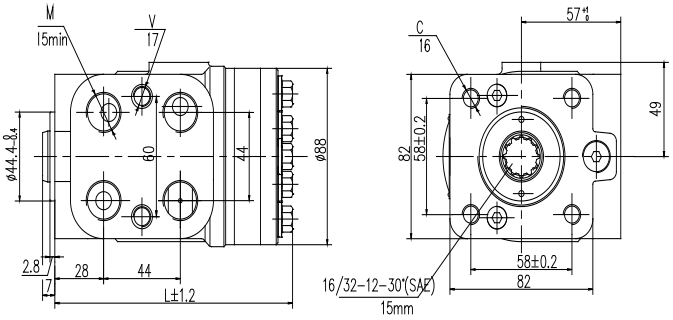

DISPLACEMENT

CODE	DISPLACEMENT (ML/R)	RATE FLOW (L/MIN)	MAX. IMPUT PRESSURE (PSI)	MAX. CONT. BACK PRESSURE (PSI)	DIMENSION L (MM)
0	50	5	2538	362	128.5
A	63	6.5	2538	362	130.5
1	80	8	2538	362	130.5
2	100	10	2538	362	13
3	125	12.5	2538	362	136
4	160	16	2538	362	141
5	200	20	2538	362	146
6	250	25	2538	362	152
7	315	31.5	2538	362	162
8	400	40	2538	362	172
9	500	50	2538	362	184

INTEGRATED VALVES MODEL AVAILABLE

VARIETY OF RELIEF, SHOCK, ANTI-CAVITATION & CHECK VALVES AVAILABLE UPON DEMAND.

1.5ME SERIE

- BI-DIRECTIONAL
- SAE-AA 2 BOLT MOUNTING FLANGE
- 1/2 PARALLEL SHAFT
- SAE 04 DRAIN PORT

*** NEW HIGH PRESSURE SHAFT SEAL AVAILABLE CAN GO UP TO 450 PSI COMPARE TO 43 PSI WITHOUT**

PART NUMBER	DISPLACEMENT IN³ (CM³) / REV.	DIMENSION H (IN)	RPM MIN	RPM MAX	MAX PSI	PORT SIZE IN & OUT
610910328	0.17 *(2.8)*	3.35	700	4500	3625	SAE 8
610911088	0.21 *(3.5)*	3.42		4500	3625	
610910348	0.25 *(4.1)*	3.49		4000	3625	
610911098	0.32 *(5.2)*	3.61		4000	3335	
610910368	0.38 *(6.2)*	3.72	600	3600	3335	
610911108	0.46 *(7.6)*	3.88		3300	2900	SAE 10
610910388	0.57 *(9.3)*	4.07		3000	2610	
610910398	0.67 *(11)*	*4.26*		3000	2465	

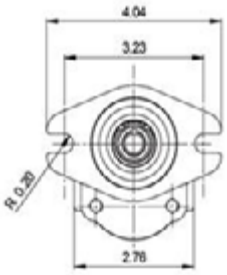

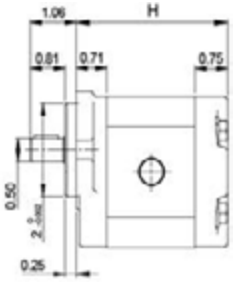

2ME SERIE

- BI-DIRECTIONAL
- SAE-A 2 BOLT MOUNTING FLANGE
- 5/8" PARALLEL SHAFT
- SAE 04 DRAIN PORT

*** NEW HIGH PRESSURE SHAFT SEAL AVAILABLE CAN GO UP TO 450 PSI COMPARE TO 43 PSI WITHOUT**

ALSO AVAILABLE

- OTHER SHAFT DIMENSIONS
- OUTRIGGER BEARING TO ACCEPT SIDE LOAD
- REAR PORT COVER
- INTERNAL DRAIN

PART NUMBER	DISPLACEMENT IN³ (CM³) / REV.	DIMENSION H (IN)	RPM MIN	RPM MAX	MAX PSI	PORT SIZE IN & OUT
612095948	0.40 *(6.5)*	3.64	600	4000	3600	SAE 10
612081668	0.50 *(8.3)*	3.74	500	3600		
612083618	0.68 *(11.3)*	4.02		3500		
612084388	0.84 *(13.8)*	4.17		3400		
612084398	1.01 *(16)*	4.32	450	3200		
612084408	1.15 *(19)*	4.64			3140	SAE 12
612084418	1.37 *(22.5)*	4.86		3000	2900	
612084428	1.58 *(26)*	5.09		2850	2600	

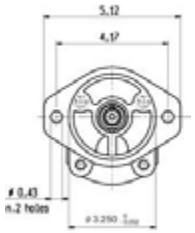

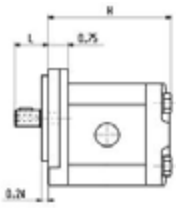

2MGE CAST IRON SERIE

- BI-DIRECTIONAL
- SAE-A 2 BOLT MOUNTING FLANGE
- 5/8" PARALLEL SHAFT
- SAE 04 DRAIN PORT

*** NEW HIGH PRESSURE SHAFT SEAL AVAILABLE CAN GO UP TO 450 PSI COMPARE TO 43 PSI WITHOUT**

ALSO AVAILABLE

- OTHER SHAFT DIMENSIONS
- OUTRIGGER BEARING TO ACCEPT SIDE LOAD
- REAR PORT COVER
- INTERNAL DRAIN

PART NUMBER	DISPLACEMENT IN³ (CM³) / REV.	DIMENSION H (IN)	RPM MIN	RPM MAX	MAX PSI	PORT SIZE IN & OUT
614670872	1.01 *(16)*	4.31	450	3200	3600	SAE 10
614670882	1.18 *(19)*	4.63	450	3200	3140	SAE 12
614670892	1.37 *(22.5)*	4.85	450	3000	2900	SAE 12
614670902	1.58 *(26)*	5.08	450	2850	2600	SAE 12

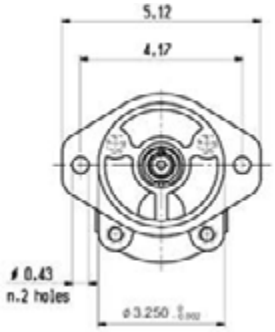

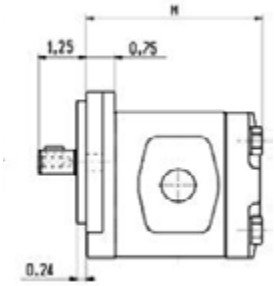

3ME SERIE

- BI-DIRECTIONAL
- SAE-B 2 BOLT MOUNTING FLANGE
- 7/8" PARALLEL SHAFT
- 3/8" BSP DRAIN PORT

*** NEW HIGH PRESSURE SHAFT SEAL AVAILABLE : CAN GO UP TO 450 PSI COMPARE TO 43 PSI WITHOUT**

PART NUMBER	DISPLACEMENT IN³ (CM³) / REV.	DIMENSION H (IN)	RPM MIN	RPM MAX	MAX PSI	PORT INLET	PORT OUTLET
612978738	1.65 *(27)*	5.26	600	3000	360	SAE 16	SAE 12
612978748	2.04 *(38)*	5.46	500				
612978768	2.86 *(46)*	6.24		2750	3500	SAE 20	SAE 16
612978778	3.30 *(55)*	6.48	400	2500	3190		

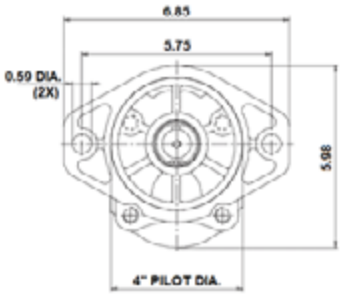

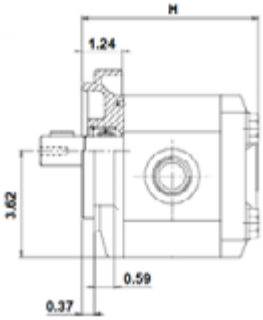

HPM3

FIXED DISPLACEMENT BENT AXIS PISTON MOTORS

FEATURES:

- AVAILABLE WITH ISO, SAE AND DIN STANDARD MOUNTING
- HIGH SPEED AND HIGH EFFICIENCY MOTORS
- SMOOTH OPERATION OVER THE ENTIRE SPEED RANGE
- LONG LIFE WITH HIGH PERFORMANCES

	MAX			
DISPLACEMENT IN³ (CM³) / REV.	**PSI (RATED)**	**PSI PEAK**	**RPM**	**WEIGHT KG *(LB)***
0.8 *(12)*	5075	5800	6800	8.5 (18)
1.1 *(17)*				
1.5 *(25)*				11.5 (24)
2.1 *(34)*				
2.5 *(40)*			5500	20 (44)
3.9 *(64)*				
5.1 *(80)*			4500	30.5 (66)
5.5 *(91)*				
6.6 *(108)*				38.5 (84)
7.9 *(130)*				

ANTI-CAVITATION VALVE

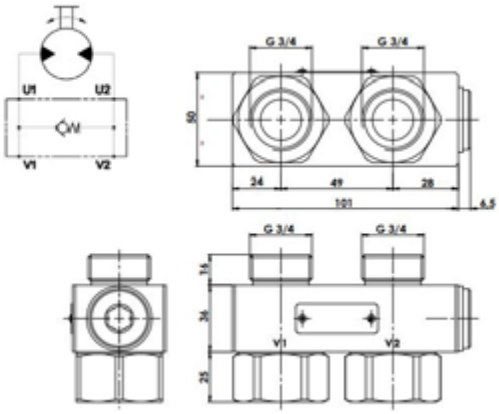

SPEED SENSOR

APPLICATIONS

- SPEED DETECTION OF GEARWHEELS WITH SMALL MODULE AND HIGH RESOLUTION. APPLICATIONS IN VEHICULES, MOBILE OPERATING MACHINES AND HYDRAULIC DRIVES.

FEATURES:

- CHOICE OF DIFFERENT OUTPUT SIGNAL
- SMALL SIZE
- ALIGNMENT REQUIRED
- WIDE TEMPERATURE RANGE
- WIDE FREQUENCY RANGE

TMF 900
FIXED DISPLACEMENT AXIAL PISTON MOTORS

FEATURES:
- HIGH PRESSURE
- HIGH ROTATION SPEED
- EXCELLENT VOLUMETRIC AND MECHANICAL EFFICIENCY
- COMPACT DESIGN

	MAX			
DISPLACEMENT IN³ *(CM³)* / REV.	PSI (RATED)	PSI PEAK	RPM	WEIGHT KG *(LB)*
4.4 *(72)*	5800	6525	4100	28 *(62)*
5.5 *(90)*			4000	34 *(75)*
6.7 *(110)*			3800	

TMV 550
TWO SPEED AXIAL PISTON MOTORS

FEATURES:
- EXCELLENT WEIGHT/POWER RATIO
- HIGH ROTATION SPEED
- EXCELLENT VOLUMETRIC AND MECHANICAL EFFICIENCY
- COMPACT DESIGN

	MAX			
DISPLACEMENT IN³ *(CM³)* / REV.	PSI (RATED)	PSI PEAK	RPM	WEIGHT KG *(LB)*
2.7 *(46)*	4350	5800	4000	20 *(44)*
3.1 *(50)*				
3.9 *(64)*				

TMV 650
TWO SPEED AXIAL PISTON PLUG-IN MOTORS

FEATURES:
- SWASHPLATE DESIGN FOR HYDROSTATIC TRANSMISSIONS
- PLUG-IN MOUNTING
- HEAVY DUTY BEARINGS FOR LONG SERVICE LIFE
- HIGH PERMISSIBLE OUTPUT SPEED

	MAX			
DISPLACEMENT IN³ *(CM³)* / REV.	PSI (RATED)	PSI PEAK	RPM	WEIGHT KG *(LB)*
1.5 *(25)*	4350	5075	3500	15,6 *(34)*
1.8 *(30)*				
2.1 *(35)*				
2.3 *(38)*				
2.7 *(45)*				

TMF 600
FIXED DISPLACEMENT AXIAL PISTON MOTORS

FEATURES:
- HIGH STARTING TORQUE
- SMOOTH OPERATION
- LONG SERVICE LIFE
- HIGH POWER DENSITY
- BUILT-IN VALVES AVAILABLE
- SPEED SENSOR AVAILABLE

	MAX			
DISPLACEMENT IN³ (CM³) / REV.	PSI (RATED)	PSI PEAK	RPM	WEIGHT KG *(LB)*
1.3 *(22)*	5075	6090	4200	11,3 *(25)*
1.7 *(28)*				
2.1 *(35)*			4000	17,8 *(39)*
2.4 *(40)*		5945	3600	
2.8 *(46)*				
3.1 *(50)*				
3.8 *(63)*		6090	3500	32,5 *(72)*
4.3 *(71)*				
4.6 *(75)*				
5.6 *(92)*				
100 *(6.1)*		5945	3240	

Our power units follow the same vigorous production and assembly processes as the rest of our products. The Hydro Custom power units are used in various applications :

- Car lift
- Snow plow
- Dock leveler
- Lift table
- Scissor lift
- Tail gate
- Fork lift
- Tipper trailer
- Dump trailer
- Garbage truck
- RV
- Wheel chair and medical

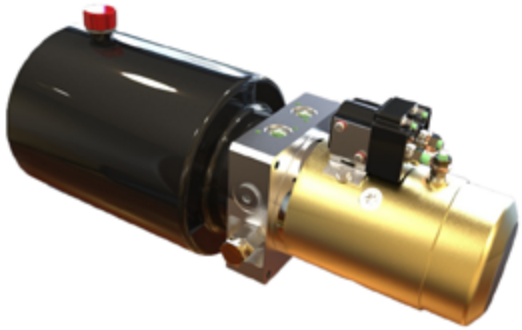

FEATURES AND BENEFITS

- Choice of configurations of multiple components such as pumps, valves, motors and tanks
- Experienced advisors in hydraulic circuit conception that will help you with the design of powers units according to your needs and requirements
- Power units can be fitted with blocks manifold designed to your specifications and manufactured in our workshops
- Mounting and testing of power units in a clean environment and without contamination, according to procedures established by highly qualified technicians
- Manufacturing customized solutions or series are possible taking into consideration the time of execution, the amount and the budgetary
- Price constraints
- 3D drawings, hydraulic and electrical plans and reports of tests (flow, pressure, speed, etc.) upon request
- Variety of standard power units distributed in our three warehouses across North America
- Several points of service in North America with hydraulic spare parts
- Well studied Quality/Price Ratio in order to provide you with the best possible offer
- Tank can be used horizontally or vertically

Whatever your requirements, our experienced team will be able to design the unique hydraulic solution that meets your individual specifications. Project appraisal, inventory request and orders are accessible to affiliated distributors.

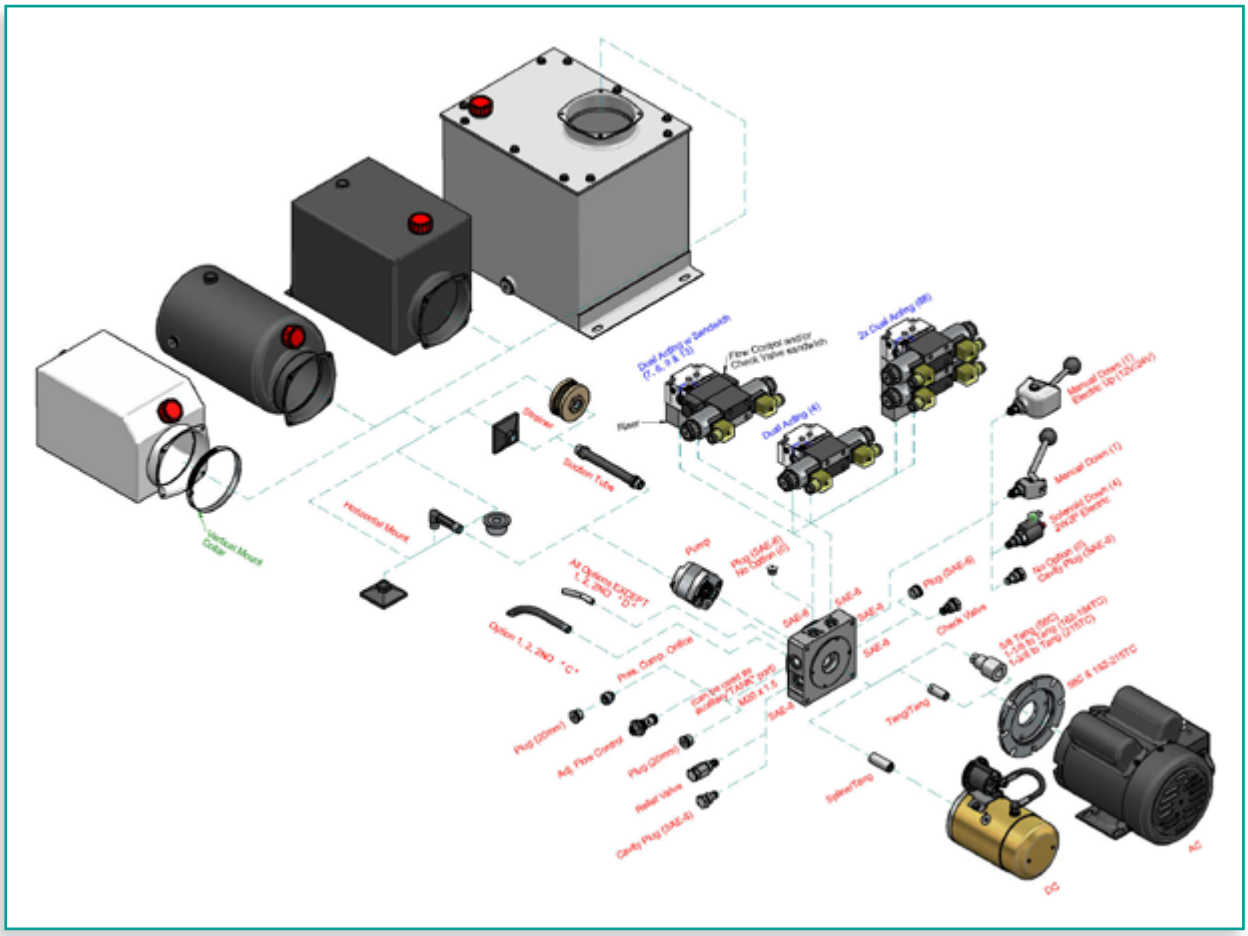

MODEL CODE

X X X X – X X.X X X X X X X

Voltage, Power, Speed, Mounting — DC/AC

Relief pressure

Pump, Tank type

Tank size

Circuit

Valve voltage

Remote

DC

VOLTAGE

CODE	VOLTAGE
1	12 V DC
2	24V DC

POWER

CODE	HORSEPOWER
W	2.4 HP - 1.8 KW
A	2.9 HP - 2.2 KW LD
C	2.9 HP - 2.2 KW LD

LD = LONG DUTY

SPEED

CODE	MOTOR SPEED
0	NO MOTOR
2	2500 RPM

MOUNTING

CODE	MOUNTING
W	DC 4.5"

AC

VOLTAGE

CODE	VOLTAGE
A	115/230V AC
B	115/230V AC-CSA
C	575V AC-CSA
D	230V AC-CSA
E	230/460V AC-CSA

POWER

CODE	HORSEPOWER	AVAIL. IN MTG.
A	0.25 HP - 0.19KW	C
B	0.33 HP - 0.25 KW	C/D/E
C	0.5 HP - 0.37 KW	D/E
D	0.75 HP - 0.55 KW	D/E
E	1 HP - 0.75 KW	D/E
F	1.5 HP - 1.1 KW	D/E
G	2 HP - 1.5 KW	D/E
H	3 HP - 2.2 KW	D/E/F/H
J	5 HP - 3.7 KW	F/H
K	7.5 HP - 5.5 KW	H
L	10 HP - 7.5 KW	H

SPEED

CODE	MOTOR SPEED
0	NO MOTOR
K	1800 RPM 60 HZ TEFC
L	3600 RPM 60 HZ TEFC
M	1800 RPM 60 HZ TENV
N	3600 RPM 60 HZ TENV
P	1800 RPM 60 HZ EPFC
Q	3600 RPM 60 HZ EPFC
R	1800 RPM 60 HZ TEFC-WD
S	3600 RPM 60 HZ TEFC-WD
T	1800 RPM 60 HZ ODP
U	3600 RPM 60 HZ ODP

MOUNTING

CODE	MOUNTING
C	48 C
D	56 C + TANG
E	56 C
F	143 T / 145 T
H	182 T / 184 T
K	213 T / 215 T

SEE P.70

*B-E-K-D = Can be supplied with toggle + cable with North American plug.

RELIEF PRESSURE

CODE	RELIEF PRESSURE
X	NO RELIEF
C	1000 PSI
E	2900 PSI
F	3200 PSI
H	4200 PSI

PUMP

CODE	PUMP		
	RPM	PSI NOMINAL	PSI PEAK
0.8	2900	3625	4060
1.2	2900	3625	4060
1.6	2900	3625	4060
2.1	2900	3625	4060
2.5	2900	3625	4060
3.2	2900	3625	4060
4.2	2600	3335	3770
6.0	2030	2600	3770
8.0	1450	2030	2600

TANK TYPE

CODE	TANK TYPE
H	NO TANK - SHORT
L	NO TANK - LONG
P	PLASTIC HORIZ.
Q	PLASTIC VERT.
R	ROUND STEEL HORIZ.
S	SQUARE STEEL HORIZ.
T	ROUND STEEL VERT.
U	SQUARE STEEL VERT.

SEE P.69

TANK SIZE

CODE	TANK TYPE	SIZE
A	PLASTIC TANK	4.0 L - 1.0 GAL
B		5.0 L - 1.3 GAL
L		6.0 L - 1.6 GAL
C		8.0 L - 2.1 GAL
D		10 L - 2.6 GAL
E		12 L - 3.2 GAL
P		14 L - 3.7 GAL
G		16 L - 4.2 GAL
Q		21 L - 5.5 GAL
Y	ROUND STEEL HORIZ. TANK	1.5 L - 0.4 GAL
Z		2.0 L - 0.53 GAL
A		4.0 L - 1.0 GAL
B		5.0 L - 1.3 GAL
C		8.0 L - 2.1 GAL
D		10 L - 2.6 GAL
D	SQUARE STEEL HORIZ. TANK	10 L - 2.6 GAL
E		12 L - 3.2 GAL
F		15 L - 4.0 GAL
H		20 L - 5.3 GAL
J		25 L - 6.6 GAL
K	ROUND STEEL VERT. TANK	3.0 L - 0.8 GAL
L		6.0 L - 1.3 GAL
D		10 L - 2.6 GAL
E		12 L - 3.2 GAL
E	SQUARE STEEL VERT. TANK	12 L - 3.2 GAL
P		16 L - 4.2 GAL
Q		21 L - 5.5 GAL
2		25 L - 6.6 GAL
3		35 L - 9.2 GAL
4		40 L - 10.5 GAL
6		60 L - 15.8 GAL

SEE P.69

CIRCUIT

CODE	CIRCUIT
0	NO OPTION
1	MANUAL DOWN
2	SOLENOID DOWN
2NO	SOLENOID DOWN N.O.
4	DOUBLE ACTING D03
7	DA CC + FLOW CONTR
8	DA OC + FLOW CONTR
9	DA HC + FC + CV
13	DA OC + CHECK VALVES
14R	SNOW PLOW
61	TIPPER TRAILER
66	DOUBLE ACTING X 2 D03
66C	DOUBLE ACTING X 2 CARTR
80	DOCK LEVELER 1
81	DOCK LEVELER 2
CL	CAR LIFT
D3	D03 NO VALVE
SXX	SPECIAL

SEE P.68

CC = CLOSED CENTER
TC = TANDEM CENTER
OC = OPEN CENTER

FC = FLOW CONTROLS
CV = CHECK VALVES

VALVE VOLTAGE

CODE	RELIEF PRESSURE
	NO VOLTAGE
A	12 VDC
B	24 VDC
C	110 VDC
M	MANUAL

REMOTE

CODE	REMOTE
	NO REMOTE
2	3 WIRES / 2 BUTTONS
4	4 WIRES / 2 BUTTONS
66	6 WIRES / 4 BUTTONS

REMOTES AND ACCESSORIES

2 BUTTONS 3 WIRES 4 WIRES 10 FT. EXTENDER

2 BUTTONS 3 WIRES 4 WIRES

SHEMATIC

CC = CLOSED CENTER
TC = TANDEM CENTER
OC = OPEN CENTER

FC = FLOW CONTROLS
CV = CHECK VALVES

0 NO OPTION

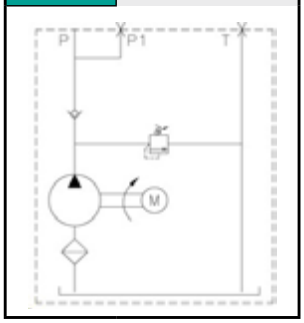

1 MANUAL DOWN

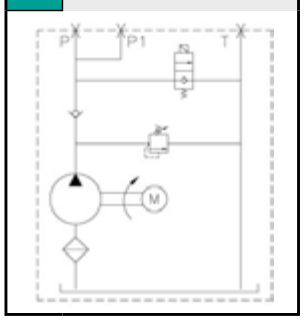

2 SOLENOID DOWN

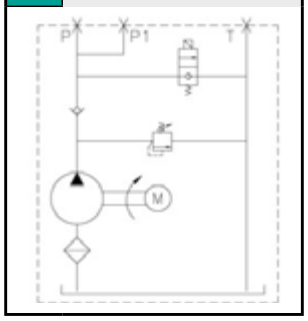

2NO SOLENOID DOWN N.O.

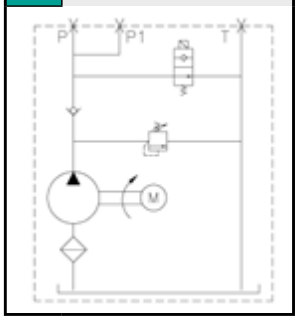

4 DOUBLE ACTIING TC D03

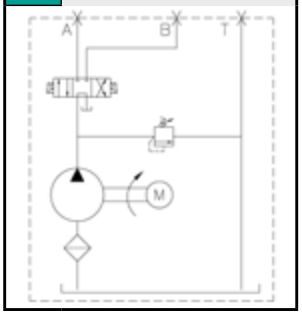

7 DA CC + FLOW CONTROL

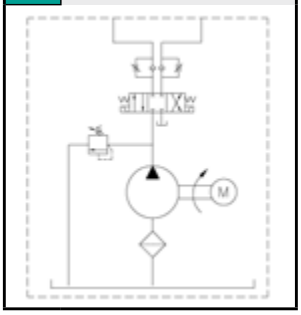

8 DA TC + FLOW CONTROL

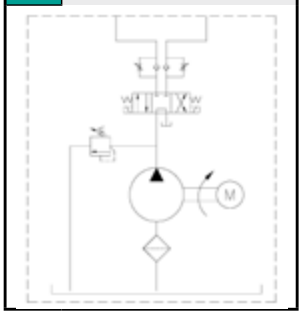

9 DA OC + FC + CV

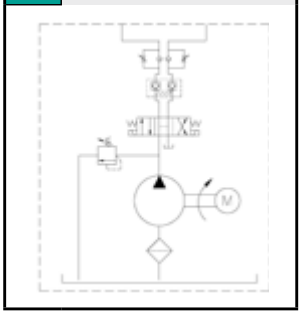

13 DA TC + CHECK VALVES

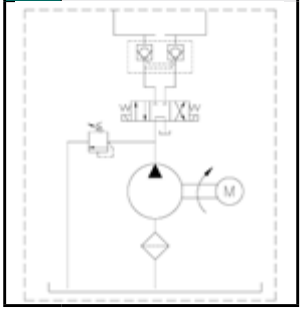

14R SNOW PLOW

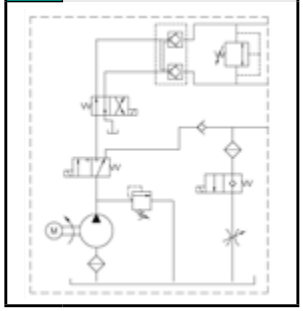

61 TIPPER TRAILER

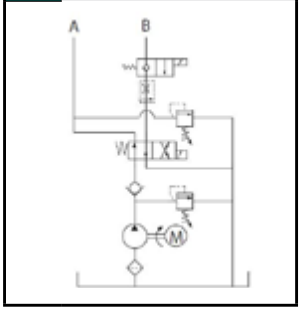

66 / 66C DOUBLE ACTING X2 CC D03 / CARTR

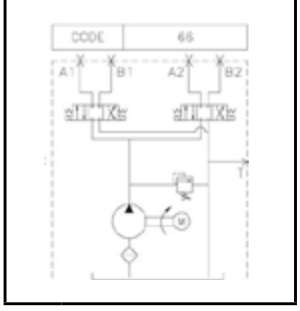

80 DOCK LEVELER 1

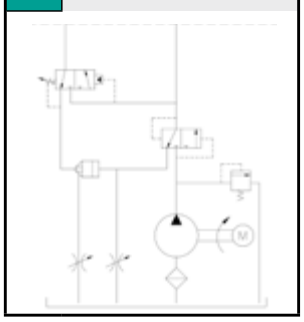

81 DOCK LEVELER 2

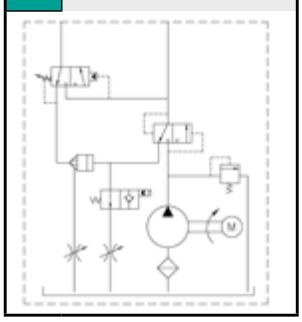

CL CAR LIFT

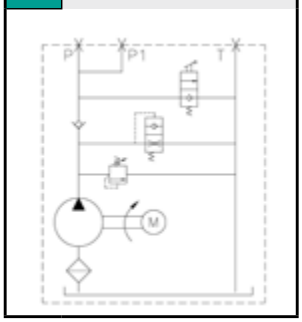

D03 D03 NO VALVE

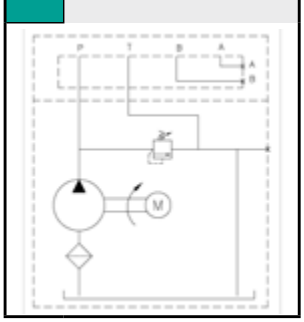

RESERVOIRS

BREATHER WITH DIPSTICK INCLUDED

SQUARE PLASTIC HORIZONTAL

CODE	GALLONS	USABLE	DIMENSIONS (IN)
PA	1.06	0.7	7.1 SQ. x 7.9 LG.
PB	1.32	1.2	7.1 SQ. x 11.4 LG.
PL	1.58	1.6	7.1 SQ. x 13.2 LG.
PC	2.11	2.06	7.1 SQ. x 17.3 LG.
PD	2.64	2.53	7.1 SQ. x 20.9 LG.
PE	3.17	2.63	7.1 SQ. x 21.7 LG.
PP	3.69	2.87	7.1 SQ. x 23.4 LG.
PG	4.23	3.42	7.1 SQ. x 27.6 LG.
PQ	5.55	5.23	7.1 SQ. x 41.3 LG.

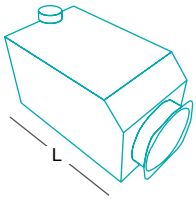

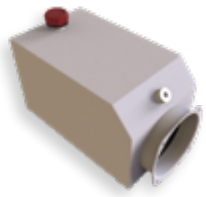

SQUARE PLASTIC VERTICAL

CODE	GALLONS	USABLE	DIMENSIONS (IN)
QA	1.06	0.88	7.1 SQ. x 7.9 LG.
QB	1.32	1.42	7.1 SQ. x 11.4 LG.
QL	1.58	1.64	7.1 SQ. x 13.2 LG.
QC	2.11	2.34	7.1 SQ. x 17.3 LG.
QD	2.64	2.92	7.1 SQ. x 20.9 LG.
QE	3.17	3.04	7.1 SQ. x 21.7 LG.
QP	3.69	3.17	7.1 SQ. x 23.4 LG.
QG	4.23	3.96	7.1 SQ. x 27.6 LG.
QQ	5.55	6.20	7.1 SQ. x 41.3 LG.

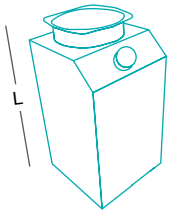

ROUND STEEL HORIZONTAL

CODE	GALLONS	USABLE	DIMENSIONS (IN)
RY	0.39	0.39	4.75 DIA. x 6.3 LG.
RZ	0.53	0.53	4.75 DIA. x 8.5 LG.
RA	1	0.91	7.0 DIA. x 7.8 LG.
RB	1.32	1.04	7.0 DIA . x 9.8 LG.
RC	2.11	1.81	7.0 DIA. x 14.5 LG.
RD	2.64	2.2	7.0 DIA. x 17.3 LG.

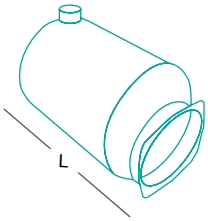

ROUND STEEL VERTICAL

CODE	GALLONS	USABLE	DIMENSIONS (IN)
TK	0.79	0.77	7.0 DIA. x 7.8 LG.
TL	1.59	1.2	7.0 DIA. x 11.8 LG.
TD	2.64	2.2	7.0 DIA. x 7.3 LG.
TE	3.17	2.77	7.0 DIA. x 21.2 LG.

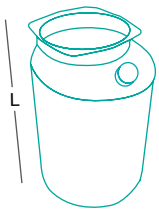

SQUARE STEEL HORIZONTAL

CODE	GALLONS	USABLE	DIMENSIONS (IN) H x L x W
SD	2.6	2.2	8.25 x 10.2 x 7.7
SE	3.2	2.6	8.25 x 11.8 x 7.7
SF	4	3.5	8.25 x 16.1 x 7.7
SH	5.3	4.7	8.25 x 21 x 7.7
SJ	6.6	6.2	8.25 x 27.8 x 7.7

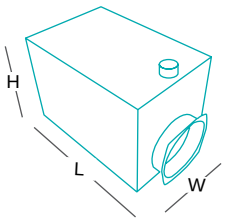

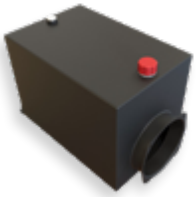

SQUARE STEEL VERTICAL

CODE	GALLONS	USABLE	DIMENSIONS (IN) H x L x W
UE	3.2	2.9	8.25 x 11.8 x 7.7
UP	4.2	3.9	7.1 x 23.2 x 7.1
UQ	5.5	5.1	7.1 x 29.1 x 7.1
U2	6.6	6.6	11 x 11.8 x 13.5
U3	9.2	9.2	13.38 x 13 x 14.17
U4	10.6	10.6	11 x 18 x 13.5
U6	15.9	15.9	13.78 x 16.14 x 17.71

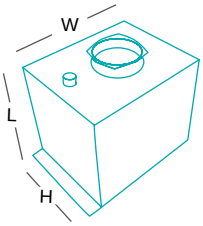

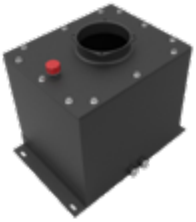

AC MOTOR			
HP	FRAME	LENGTH X (IN)	WIDTH W (IN)
0.25	F48C	8.15	7.72
0.33			
0.5	F56C	9.44	9.51
0.75			
1			
1.5	F143/145 TC	9.44	9.51
3	F182/184 TC	13.16	11.94
7.5	F213/215 TC	15.51	13.00
10			

DC MOTOR	
HP	LENGTH X (IN)
2.4 / 12V	7.125
2.9 / 12V	
2.9 / 24V	

AC MOTOR FLANGE	
FRAME	LENGTH F (IN)
F48	1.094
F56	
F182	3.812
F184	
F215	

CIRCUIT		
CODE	TYPE	WIDTH E (IN)
14R	SNOW PLOW	1.73
66C	DOUBLE ACTING X 2 CARTR	1.93
80	DOCK LEVELER 1	
81	DOCK LEVELER 2	
-	ALL OTHERS	1.57

AC

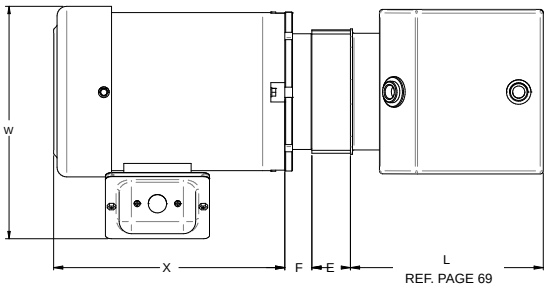

DC

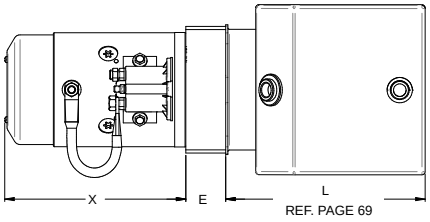

TIPPER TRAILER

- DC DRIVEN HYDRAULIC POWER PACK FOR DUMPERS WITH REMOTE

DOCK LEVELER

- AC DRIVEN POWER PACK USED ON ALL MAJOR LOADING DOCKS

CAR LIFT

- AC DRIVEN POWER PACK USED ON CAR/ TRUCK LIFTS FOR MAINTENANCE OR STORING APPLICATIONS

SNOW PLOW UNITS

SPECIAL DESIGN DC DRIVEN POWER PACK

UNIT PART NUMBER: 1W2W-F2.5RY14A

- CUSHION VALVE TO ABSORB SHOCKS ON LEFT-RIGHT MOVEMENT
- MADE FOR 3 SINGLE ACTING CYLINDERS
- LEFT/RIGHT LIFT AND FLOAT

REMOTE SPECIFICATIONS - PART NUMBER: SP4AF1

- 2 AXIS JOYSTICK (LEFT, RIGHT, UP & DOWN)
- ROCKER SWITCH WITH LIGHT TO ACTIVATE FLOAT POSITION
- 10 FT. CABLE

ROTARY ACTUATOR

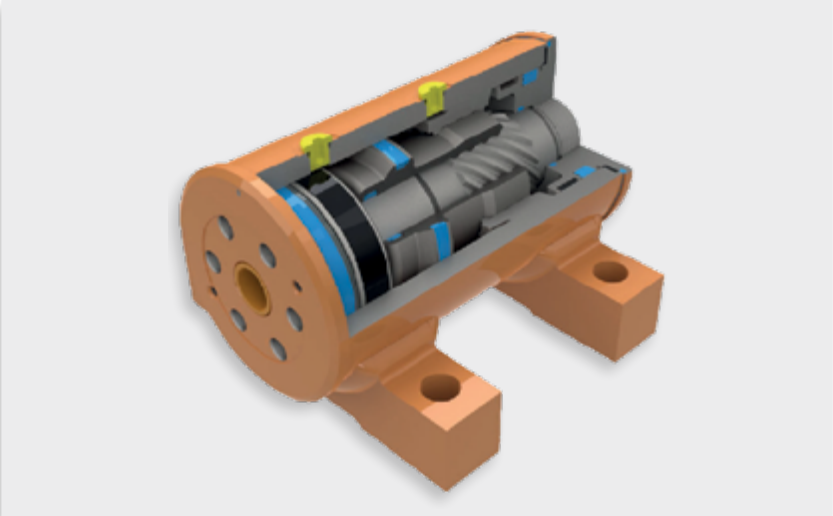

Powerful
High torque
High bearing

Drift free positioning
Zero internal leakage
Smooth operation
No external brake required

Backdrives in overload conditions
Hydraulic fuse
Prevents mechanical damage

Ultra-Compact
High power density
Fits in tight spaces

Streamline design
Eliminates linkages and bearings
Reduced bill of materials

Durable
Suitable for harsh environments
Moving parts enclosed

TEFC MOTORS

- CHOICE OF 1/3 TO 20HP
- 1800 RPM (3600 RPM AVAILABLE)
- SINGLE AND THREE PHASE
- NEMA FRAME FROM 56 TO 215 TC
- IP44 CLASS, 1.15 FS
- VOLTAGE AVAILABLE:
  - 115/230V
  - 575V
  - 208-230/460V

HP	PART NUMBERS			FRAME
	115/230V SINGLE PHASE	**575V** THREE PHASES	**208-230/460V** THREE PHASES	
1/3	F56C1/3S4C	F56C1/3M4D	F56C1/3M4A	56C
1/2	F56C1/2S4C	F56C1/2M4D	F56C1/2M4A	
3/4	F56C3/42S4C	F56C3/4M4D	F56C3/4M4A	
1	F56C1S4	F56C1M4D	F56C1M4A	
1.5	F56C1.5S4C	F56C1.5M4D	F56C1.5M4A	
2	F56C2S4C	F56C2M4D	F56C2M4A	
3	-	F182TC3M4D	F182TC3M4A	182TC
5	-	F184TC5M4D	F184TC5M4A	184TC
7.5	-	F215TC7.5M4D	F215TC7.5M4A	213TC
10	-	F215TC10M4D	F215TC10M4A	215TC
15	-	F215TC15M4D	F215TC15M4A	254TC
20	-	F215TC20M4D	F215TC20M4A	256TC

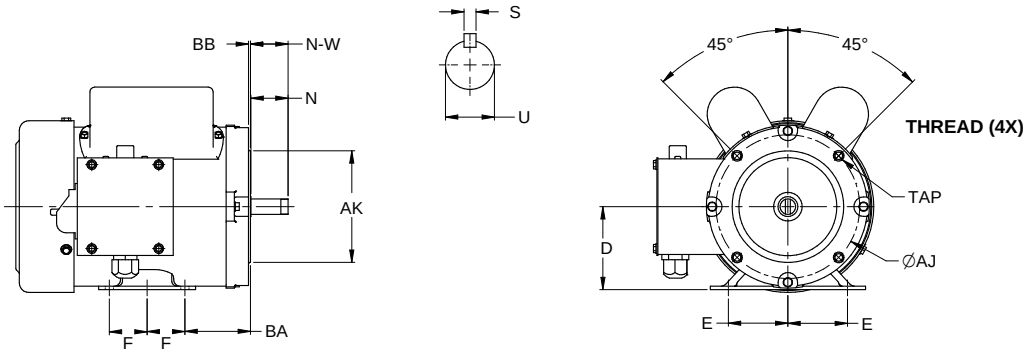

DIMENSIONS

FRAME SIZE	D	E	F	N	U	S	N-W	AJ	AK	BA	BB	THREAD
56C	3.500	2.438	1.5	1.937	0.625	0.188	1.880	5.875	4.500	2.750	0.160	3/8-16 UNC
143T 145T	3.5	2.75	2 2.5	2.31	0.875	0.188	2.25	5.875	4.5	2.25	0.16	3/8-16 UNC
182T 184T	4.500	3.750	2.250 2.750	2.875	1.125	0.250	2.750	7.250	8.500	2.750	0.250	1/2-12 UNC
213T	5.25	4.25	2.75	3.375	1.375	0.312	3.125	7.25	8.5	3.5	0.25	1/2-13 UNC
215T	5.250	4.250	3.500	3.375	1.375	0.312	3.125	7.250	8.500	3.500	0.250	1/2-13 UNC
254T 256T	6.25	5	4.125 5	4.32	1.625	0.375	4	7.25	8.5	4.75	0.25	1/2-13 UNC

FEATURES AND BENEFITS

- VERY ECONOMICAL & COMPACT DESIGN
- DIRECT MOUNT MOTOR CAN BE ORDERED SEPARATELY

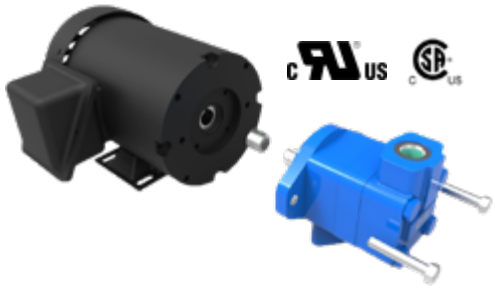

MODEL CODE

EXAMPLE

DM56CS4C 4- PS2.8

PUMP : 4-PS2.8 (GEAR TYPE, 2.8CC)

MOTOR : F (NO COUPLING), 2 OR 4

MOTOR : DM56CS4C (1HP, 115/230V)

MOTORS - TEFC - 1800 RPM

HP	PART NUMBERS			FRAME	PUMP SIDE FLANGE & SHAFT
	115/230V SINGLE PHASE	575V THREE PHASES	208-230/460V THREE PHASES		
0,50	DM56C1/2S4CF	-	-	56C	SAE A-2B FLANGE AND SAE AA-4B FLANGE
0,75	DM56C3/4S4CF	-	-		
1	DM56C1S4CF	-	-		
1,5	DM56C1.5S4CF	-	-		
2	DM56C2S4CF	-	-		
3	DM56C3S4CF	-	-		
	-	DM215TC3M4DF	DM215TC3P4AF	215TC	SAE A-2B FLANGE
5	-	DM215TC5M4DF	DM215TC5P4AF		
7,5	-	DM215TC7.5M4DF	DM215TC7.5P4AF		
10	-	DM215TC10M4DF	DM215TC10P4AF		
15	-	DM215TC15M4DF	DM215TC15P4AF		
20	-	DM215TC20M4DF	DM215TC20P4AF		

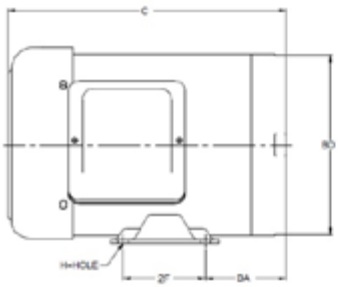

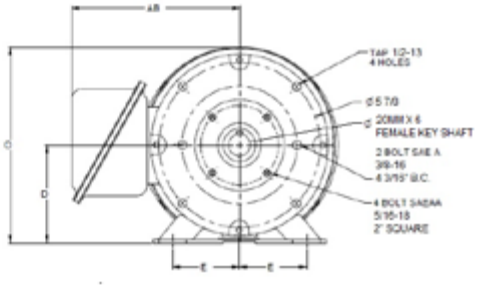

FRAME	C	D	E	2F	H	O	BD	AB	BA
56C	10 1/8	3 1/2	2 7/16	3	11/32 SLOTS	7	6 1/2 DIA	6 1/8	2 15/16
215TC	15 5/8	5 1/4	4 1/4	7	13/32 DIA	11	8 1/2 DIA	8 3/8	3 1/2

PUMPS

GEAR TYPE

CODE	GPM	MODEL
4-PS1.4	0,71	1.5 PE PAGE 62
4-PS2.1	1,00	
4PE2.8	1,23	
4PE3.5	1,71	
2-PS4.5	2,1	2 PE PAGE 63
2PE6.5	3,12	
2PE8.3	3,9	
2PE11.3	5,3	
2PE13.8	6,55	
2PE16	7,87	

VANE TYPE

CODE	GPM	MODEL
2-2S1	1,5	V10 PAGE 69
22S2	3,0	
22S3	4,5	
22S4	6,0	
22S5	7,5	
22S6	9,0	
22S7	10,5	
22S8	12,0	V20 PAGE 69
22S9	13,5	
22S10	15,0	
22S11	16,5	
22S12	18,0	
22S13	19,5	

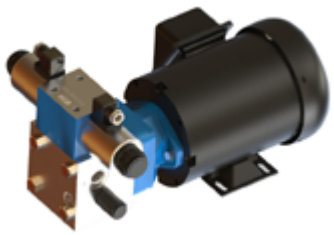

ALSO AVAILABLE

- HYDRAULIC CIRCUIT DIRECTLY MOUNTED ON THE PUMP
- VERY COMPACT DESIGN. LESS PIPING
- MANY OPTIONS
- OTHER OPTIONS AVAILABLE

PUMPS OVERVIEW

ALUMINIUM GEAR PUMPS

1.5PE
From 0.71 to 5.22 GPM
Up to 5000 RPM
Up to 3625 PSI P.76

2PE
From 2.1 to 12.31 GPM
Up to 4000 RPM
Up to 3600 PSI P.77

2PGE
From 7.87 to 12.31 GPM
Up to 3500 RPM
Up to 4350 PSI P.78

2.5PB
From 2.81 to 20.9 GPM
Up to 3000 RPM
Up to 3600 PSI P.80

3PE
From 9.7 to 34.9 GPM
Up to 3000 RPM
Up to 3600 PSI P.81

PLC
From 39.6 to 71.3 GPM
Up to 3000 RPM
Up to 3625 PSI P.82

CAST IRON GEAR PUMPS

PG330
From 6.1 to 21.2 GPM
Up to 3000 RPM
Up to 3800 PSI P.83

PNC
From 38.58 to 71.3 GPM
Up to 3000 RPM
Up to 3500 PSI P.83

QUIET GEAR PUMPS

GR1
From 6.1 to 21.2 GPM
Up to 3000 RPM
Up to 3800 PSI P.79

VANE PUMPS

V10/V20
From 1.5 to 19.5 GPM
Up to 4800 RPM
Up to 2500 PSI P.84

25VQ/35VQ/45VQ
From 18 to 90 GPM
Up to 2700 RPM
Up to 3000 PSI P.84

VARIABLE DISPLACEMENT
From 3 to 10.5 GPM
Up to 1800 RPM
Up to 1700 PSI P.85

PISTON PUMPS

PPV VARIABLE DISPLACEMENT
From 28.5 to 61.8 GPM
Up to 2500 RPM
Up to 5433 PSI P.86

BENT AXIS
From 6.1 to 21.2 GPM
Up to 3000 RPM
Up to 3800 PSI P.86

A10V SWASHPLATE
From 8.5 to 66.5 GPM
Up to 3300 RPM
Up to 3000 PSI P.87

CLOSED LOOP PISTON PUMPS

TPV 1000
Up to 3600 RPM
Up to 4350 PSI
P.90

TPV 1200 BTB
Up to 3600 RPM
Up to 4350 PSI
P.90

TPV-TPVTC 1500
Up to 3600 RPM
Up to 5800 PSI
P.91

TPV 3200
Up to 3600 RPM
Up to 5075 PSI
P.91

TPV-TPVT 3600
Up to 3600 RPM
Up to 6525 PSI
P.92

TPV 4300
Up to 3600 RPM
Up to 5057 PSI
P.92

TPV 5000
From 0.71 to 5.22 GPM
Up to 5000 RPM
Up to 3625 PSI
P.93

TPV 9000
Up to 3600 RPM
Up to 5800 PSI
P.93

OTHER PUMPS

PTO PUMP
From 7 to 22.5 GPM
Up to 6000 RPM
Up to 2000 PSI
P.88

PTO PUMP
From 11 to 19.2 GPM
Up to 546 RPM
Up to 3600 PSI
P.88

2 STAGE PUMPS
Up to 3600 RPM
Up to 900 PSI
P.88

PTO

PTO
For transmissions and motors
SAE and DIN
P.88

HAND PUMPS

HAND PUMP
Up to 3500 PSI
P.89

1.5PE SERIE

- CLOCKWISE ROTATION
- 1/2 STRAIGHT KEY SHAFT
- INLET: SAE-08 OUTLET: SAE-06

ALSO AVAILABLE

- COUNTERCLOCKWISE ROTATION
- OTHER SHAFTS & FLANGES
- TANDEM PUMPS & MULTIPLE PUMPS

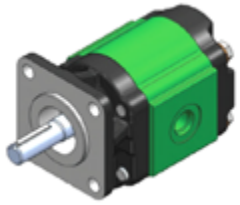

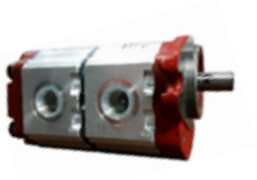

1.5PE TANDEM PUMP

DISPLACEMENT IN^3 *(CM^3)* / REV.	DIMENSION H (IN)	GPM @ 1800 RPM	MAX RPM	MAX PSI	MOUNTING	PART NUMBER
0.091 *(1.4)*	3.26	0.71	5000	3625	SAE AA - 2 BOLT	6109 1030 2
					SAE AA - 4 BOLT	6109 1050 2
0.128 *(2.1)*	3.34	1.00	5000	3625	SAE AA - 2 BOLT	6109 1031 2
					SAE AA - 4 BOLT	6109 1051 2
0.158 *(2.8)*	3.42	1.23	4500	3625	SAE AA - 2 BOLT	6109 1032 2
					SAE AA - 4 BOLT	6109 1052 2
0.219 *(3.5)*	3.49	1.71	4500	3625	SAE AA - 2 BOLT	6109 1033 2
					SAE AA - 4 BOLT	6109 1053 2
0.256 *(4.1)*	3.56	1.99	4000	3625	SAE AA - 2 BOLT	6109 1034 2
					SAE AA - 4 BOLT	6109 1054 2
0.299 *(5.2)*	3.68	2.33	4000	3335	SAE AA - 2 BOLT	6109 1035 2
					SAE AA - 4 BOLT	6109 1055 2
0.354 *(6.2)*	3.79	2.76	3600	3140	SAE AA - 2 BOLT	6109 1036 2
					SAE AA - 4 BOLT	6109 1056 2
0.457 *(7.6)*	3.95	3.56	3300	2900	SAE AA - 2 BOLT	6109 1037 2
					SAE AA - 4 BOLT	6109 1057 2
0.57 *(9.3)*	4.14	4.44	3000	2610	SAE AA - 2 BOLT	6109 1038 2
					SAE AA - 4 BOLT	6109 1058 2
0.67 *(11)*	4.33	5.22	3000	2465	SAE AA - 2 BOLT	6109 1039 2
					SAE AA - 4 BOLT	6109 1059 2

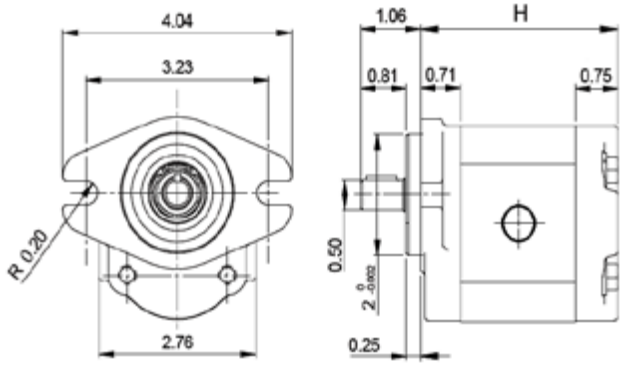

SAE AA - 2 BOLT
(R80S0 CODE)

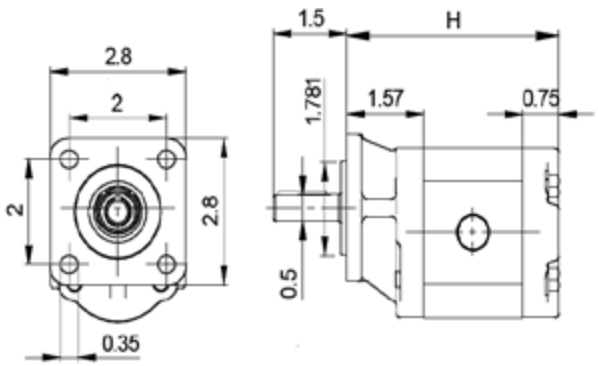

SAE AA - 4 BOLT
(R83S1 CODE)

2PE SERIE

- CLOCKWISE ROTATION
- SAE A -2 BOLT MOUNTING
- INLET: SAE 12 OUTLET: SAE 10

P28P1 SHOWN

DISPLACEMENT IN^3 (CM^3) / REV.	DIMENTION H (IN)	GPM @ 1800 RPM	MAX RPM	MAX PSI	SHAFT	PART NUMBER
0.27 *(4.5)*	3.50	2.1	4000	3600	5/8" KEY	6120 8164 2
					5/8-9T SPLINE	6120 3372 2
					3/4" KEY	6120 3757 2
					3/4-11T SPLINE	
0.40 *(6.5)*	3.64	3.12	4000	3600	5/8" KEY	6120 9594 2
					5/8-9T SPLINE	6120 9596 2
					3/4" KEY	6120 9595 2
					3/4-11T SPLINE	
0.50 *(8.3)*	3.74	3.9	3500	3600	5/8" KEY	6120 81662
					5/8-9T SPLINE	6120 8055 2
					3/4" KEY	6120 3542 2
					3/4-11T SPLINE	6120 3475 2
0.68 *(11.3)*	4.02	5.3	3500	3600	5/8" KEY	6120 8167 2
					5/8-9T SPLINE	6120 7904 2
					3/4" KEY	6120 3543 2
					3/4-11T SPLINE	6120 3512 2
0.84 *(13.8)*	4.17	6.55	3500	3600	5/8" KEY	6120 8168 2
					5/8-9T SPLINE	6120 8056 2
					3/4" KEY	6120 3544 2
					3/4-11T SPLINE	6120 3683 2
1.01 *(16)*	4.32	7.87	3000	3600	5/8" KEY	6120 8169 2
					5/8-9T SPLINE	6120 8309 2
					3/4" KEY	6120 3455 2
					3/4-11T SPLINE	6120 1808 2
1.15 *(19)*	4.64	8.96	3000	3140	5/8" KEY	6120 8170 2
					5/8-9T SPLINE	6120 7906 2
					3/4" KEY	6120 3456 2
					3/4-11T SPLINE	6120 3514 2
1.37 *(22.5)*	4.86	10.68	2750	2900	5/8" KEY	6120 8171 2
					5/8-9T SPLINE	6120 7907 2
					3/4" KEY	6120 3276 2
					3/4-11T SPLINE	6120 3532 2
1.58 *(26)*	5.09	12 31	2500	2600	5/8" KEY	6120 8172 2
					5/8-9T SPLINE	6120 7908 2
					3/4" KEY	6120 3457 2
					3/4-11T SPLINE	6120 8066 2

ALSO AVAILABLE

- COUNTERCLOCKWISE ROTATION
- OTHER SHAFTS & FLANGES
- TANDEM PUMPS & MULTIPLE PUMPS
- REAR COVERS WITH INTEGRATED VALVES
- OUTBOARD BEARING

OTHER MOUNTING FLANGES

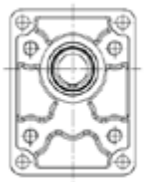

36.5MM PILOT DIA.
CODE P1

80MM PILOT DIA.
CODE B1

50MM PILOT DIA.
CODE B4/B5

OTHER PORT CONNECTIONS

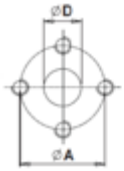

EUROPEAN FLANGE
CODE P

"BOSCH" FLANGE
CODE B

OTHER SHAFTS

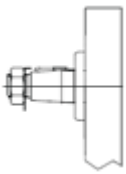

1:5 TAPERED CODE 25
1:8 TAPERED CODE 28

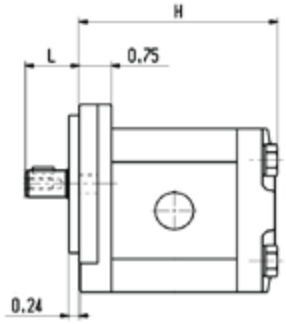

5/8"
STRAIGHT KEY
CODE 82

3/4"
STRAIGHT KEY
CODE 85

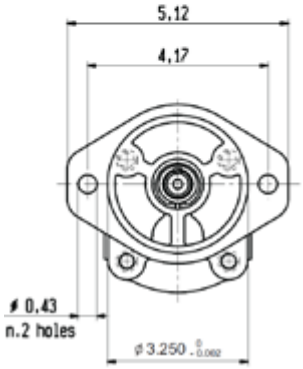

5/8-9T
SPLINED
CODE 52

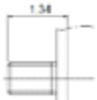

3/4-11T
SPLINED
CODE 54

2PGE SERIE CAST IRON

- CLOCKWISE ROTATION
- SAE A -2 BOLT MOUNTING
- 3/4" STRAIGHT KEY SHAFT

PART NUMBER	DISPLACEMENT IN^3 *(CM^3)* / REV.	DIMENSION H (IN)	GPM @ 1800 RPM	MAX RPM	MAX PSI	PORTS	
						INLET	OUTLET
614670872	1.01 *(16)*	4.31	7.87	3000	4350	SAE 12	SAE 10
614670882	1.18 *(19)*	4.63	8.96				
614670892	1.37 *(22.5)*	4.85	10.68	2750	4060	SAE 16	
614670902	1.58 *(26)*	5.08	12.31	2500	3750		

ALSO AVAILABLE

- COUNTERCLOCKWISE ROTATION
- OTHER SHAFTS & FLANGES
- REAR COVERS WITH INTEGRATED VALVES

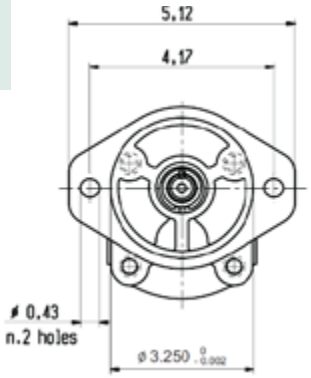

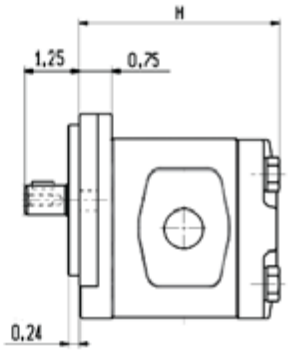

DESCRIPTION:

SETTIMA MECCANICA. CONTINUUM® REPRESENTS THE NO NOISE ALTERNATIVE TO GEAR AND VANE PUMPS TO CREATE A BETTER WORKING ENVIRONMENT. PRODUCTS ARE IDEAL FOR HIGH PRESSURE APPLICATIONS DESIGNED WITH A NO NOISE PUMP TECHNOLOGY CAPABLE OF ELIMINATING ACOUSTIC EMISSIONS AND VIBRATIONS.

NO NOISE CONTINUUM® TECHNOLOGY

ADVANTAGES:

- SPECIAL ROTORS PROFILE AVOIDS OIL ENCAPSULATION
- **NO NOISE - AVERAGE 15DB (A) - LESS NOISE COMPARED TO STANDARD GEAR AND VANE PUMPS**
- EXTREMELY LOW VIBRATIONS AND PULSATIONS
- VERY HIGH EFFICIENCY FOR A WIDE RANGE OF SPEEDS (UP TO 6.500 RPM)
- MAXIMUM OPERATING PRESSURE UP TO 300 BAR
- INTERCHANGEABLE WITH STANDARD GEAR PUMPS

QUIET GEAR PUMP 55DB

	PART NUMBER	DISPLACEMENT IN^3 *(CM^3)* / REV.	GPM@1800	MAX RPM	MAX PSI	PORTS		SHAFT	MOUNT
						INLET	OUTLET		
GR 1	28-4.2AA2B10/08-1/2K	0.26 *(4.2)*	2.03	3600	3394	SAE 10	SAE 8	1/2" KEY	SAE AA
	28-6.4AA2B10/08-1/2K	0.39 *(6.4)*	3.04		3394				
	28-8.3AA2B10/08-1/2K	0.51 *(8.3)*	3.97		3031				
	28-10.2AA2B10/08-1/2K	0.62 *(10.2)*	4.83		2741				
	28-12.9AA2B10/08-1/2K	0.79 *(12.9)*	6.16		2466				
GR 2	33-10.1A2B12/10-5/8K	0.62 *(10.1)*	4.83		3989	SAE 12	SAE 10	5/8" KEY	SAE A
	33-12.6A2B12/10-5/8K	0.77 *(12.6)*	6		3844				
	33-15.2A2B12/10-5/8K	0.93 *(15.2)*	7.25		3495				
	33-18.2A2B12/10-5/8K	1.11 *(18.2)*	8.65		2988				
GR 3	38-15.9A2B16/12-5/8K	*0.97 (15.9)*	7.56		3884	SAE 16	SAE 12		SAE B
	38-17.92B16/12-5/8K	1.09 *(17.9)*	8.49		3582				
	38-20A2B16/12-5/8K	1.09 *(17.9)*	9.51		3336				
	38-22.1A2B16/12-5/8K	1.35 *(22.1)*	10.6		3220				
	38-25.2A2B16/12-5/8K	1.54 *(25.2)*	12		2901				
	38-28.3A2B16/12-5/8K	1.73 *(28.3)*	13.48		2611				

PARAMETERS:

PARAMETERS INFLUENCING EMISSIONS OF HYDRAULIC NOISE ARE:

- CAVITATION
- PRESSURE PEAKS RISING FROM TRAPPED FLUID BETWEEN GEAR TEETH
- RIPPLE OR FLOW PULSATION

DIFFERENTLY FROM TRADITIONAL GEAR PUMPS, THE PATENTED CONTINUUM® HELICAL ROTORS PROFILE DOES NOT TRAP ANY FLUID VOLUME, RESULTING IN A GENTLE FLUID TRANSMISSION AND AN OUTSTANDING REDUCTION OF PULSATIONS.

2.5PB SERIE

- CLOCKWISE ROTATION

ALSO AVAILABLE

- SAEA - SAEB 2 BOLT
- COUNTERCLOCKWISE ROTATION
- OTHER SHAFTS & FLANGES
- TANDEM PUMPS & MULTIPLE PUMPS
- REAR COVERS WITH INTEGRATED VALVES

DISPLACEMENT IN^3 (CM^3) / REV.	DIMENSION H (IN)	GPM @ 1800 RPM	MAX RPM	MAX PSI	PORTS		SHAFT	PART NUMBER
					INLET	OUTLET		
0.36 (5.5)	4.02	2.81	3000	3600	SAE 12	SAE 10	7/8" KEY	ONLY FOR MULTIPLE 2.5PB REAR PUMPS
							7/8-13T SPLINED	
0.50 (8.3)	4.12	3.88	3000	3600			7/8" KEY	
							7/8-13T SPLINED	
0.72 (11.5)	4.26	5.61	3000	3600			7/8" KEY	6138 xxxx x
							7/8-13T SPLINED	6138 7479 2
0.86 (13.8)	4.35	6.7	3000	3600			7/8" KEY	6138 xxxx x
							7/8-13T SPLINED	6138 7470 2
0.97 (16)	4.42	7.5	3000	3600			7/8" KEY	6138 7391 2
							7/8-13T SPLINED	6138 7390 2
1.17 (19)	4.56	9.1	3000	3600			7/8" KEY	6138 7393 2
							7/8-13T SPLINED	6138 7392 2
1.35 (22)	4.07	10.5	3000	3600			7/8" KEY	6138 7125 2
							7/8-13T SPLINED	6138 7117 2
1.53 (25)	4.79	11.9	3000	3600	SAE 16	SAE 12	7/8" KEY	6138 7373 2
							7/8-13T SPLINED	6138 7372 2
1.68 (28)	5.28	13	3000	3600			7/8" KEY	6138 7127 2
							7/8-13T SPLINED	6138 7119 2
1.97 (32)	5.49	15.3	3000	3300			7/8" KEY	6138 7128 2
							7/8-13T SPLINED	6138 7120 2
2.32 (38)	5.73	18	2750	2900			7/8" KEY	6138 7129 2
							7/8-13T SPLINED	6138 7121 2
2.69 (44)	6.03	20.9	2500	2465			7/8" KEY	6138 7130 2
							7/8-13T SPLINED	6138 7122 2

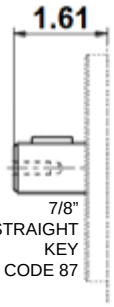

7/8" STRAIGHT KEY CODE 87

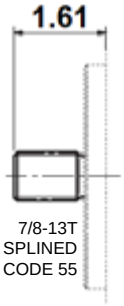

7/8-13T SPLINED CODE 55

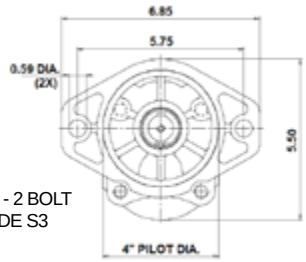

SAE B - 2 BOLT
CODE S3

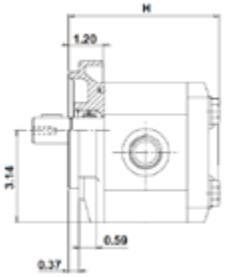

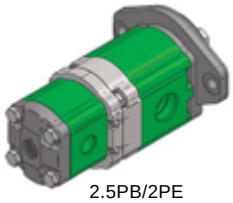

2.5PB/2PE
COMBINATION

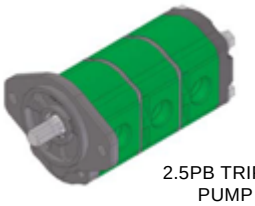

2.5PB TRIPLE
PUMP

OTHER PORT CONNECTIONS

EUROPEAN FLANGE
CODE P

OTHER SHAFTS

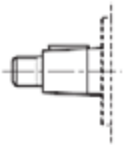

1:8 TAPERED
CODE 38

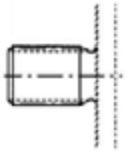

3/4-11T SPLINED
CODE 54

OTHER MOUNTING FLANGES

50.8mm PILOT
CODE P2

SAE A - 2 BOLT, 3 1/4" PILOT
CODE S2

3PE SERIE

- CLOCKWISE ROTATION
- SAE B -2 BOLT MOUNTING

ALSO AVAILABLE

- COUNTERCLOCKWISE ROTATION
- OTHER SHAFTS & FLANGES
- TANDEM PUMPS & MULTIPLE PUMPS
- REAR COVERS WITH INTEGRATED VALVES

DISPLACEMENT IN^3 (CM^3) / REV.	DIMENSION H (IN)	GPM @ 1800 RPM	MAX RPM	MAX PSI	PORTS		SHAFT	PART NUMBER
					INLET	OUTLET		
1.25 *(21)*	5.06	9.7	3000	3600	SAE 16	SAE 12	7/8" KEY	6130 1261 2
							7/8-13T SPLINE	6130 1111 2
1.65 *(27)*	5.26	12.8	3000	3600			7/8" KEY	6130 1262 2
							7/8-13T SPLINE	6130 1112 2
2.04 *(33)*	5.46	15.9	3000	3600			7/8" KEY	6130 1263 2
							7/8-13T SPLINE	6130 1103 2
2.36 *(38)*	5.61	18.4	3000	3600			7/8" KEY	6130 1264 2
							7/8-13T SPLINE	6130 1113 2
2.86 *(46)*	6.24	22.3	2750	3500	SAE 20	SAE 16	7/8" KEY	6130 1265 2
							7/8-13T SPLINE	6130 7967 2
3.30 *(55)*	6.48	25.7	2500	3190			7/8" KEY	6130 1266 2
							7/8-13T SPLINE	6130 1104 2
3.85 *(65)*	6.76	30	2500	2900			7/8" KEY	6130 1267 2
							7/8-13T SPLINE	6130 1114 2
4.48 (73.4)	7.03	34.9	2500	2610			7/8" KEY	6130 1268 2
							7/8-13T SPLINE	6130 1115 2

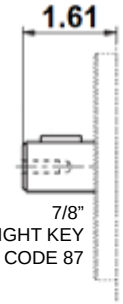

7/8" STRAIGHT KEY CODE 87

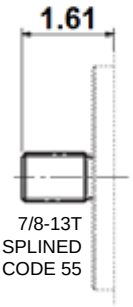

7/8-13T SPLINED CODE 55

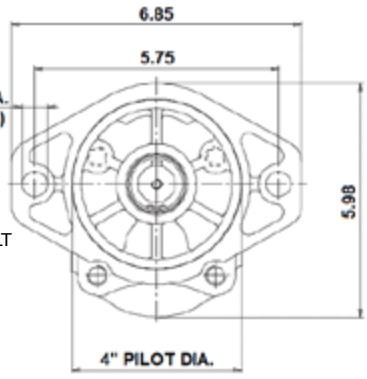

SAE B - 2 BOLT CODE S3

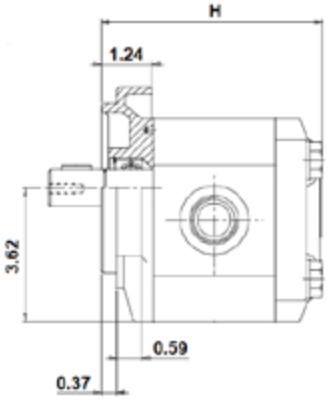

OTHER PORT CONNECTIONS

EUROPEAN FLANGE CODE P

CODE FLANGE 61 SALAMI CODE S

OTHER SHAFTS

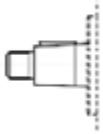

1:8 TAPERED CODE 38

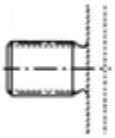

1-15T SPLINED CODE 56

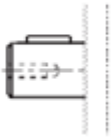

1" STRAIGHT KEY CODE 88

OTHER MOUNTING FLANGES

50.8mm PILOT CODE P2

PLC SERIE

- CLOCKWISE ROTATION
- SAE B -2 BOLT MOUNTING
- 1 1/4” STRAIGHT KEY SHAFT

ALSO AVAILABLE

- COUNTERCLOCKWISE ROTATION
- OTHER SHAFTS & FLANGES
- SMALLER DISPLACEMENTS
- TANDEM PUMPS & MULTIPLE PUMPS

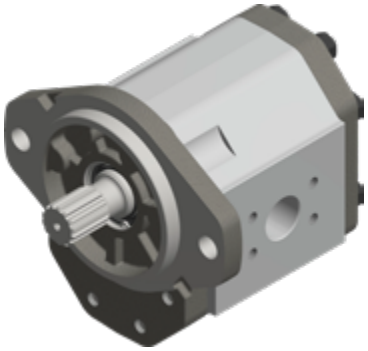

PART NUMBER	DISPLACEMENT IN^3 *(CM^3)* / REV.	DIMENSION A (IN)	GPM @ 1800 RPM	MAX RPM	MAX PSI	PORTS	
						INLET	OUTLET
1PLC 125D H09M	5.08 *(83)*	7.87	39.6	3000	3625	1 1/2” CODE FLANGE 61 (M12 THREAD)	1 1/4” CODE FLANGE 61 (M10 THREAD)
1PLC 150D H09M	6.1 *(100)*	8.19	47.5	3000	3625	2” CODE FLANGE 61 (M12 THREAD)	1 1/2” CODE FLANGE 61 (M12 THREAD)
1PLC 175D H09M	7.12 *(116)*	8.5	55.5	2500	3625		
1PLC 200D H09M	8.13 *(133)*	8.86	63.3	2000	2900		
1PLC 225D H09M	9.15 *(150)*	9.17	71.3	1750	2540		

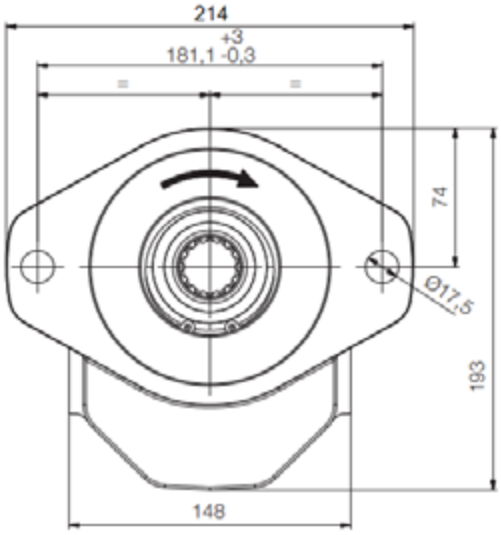

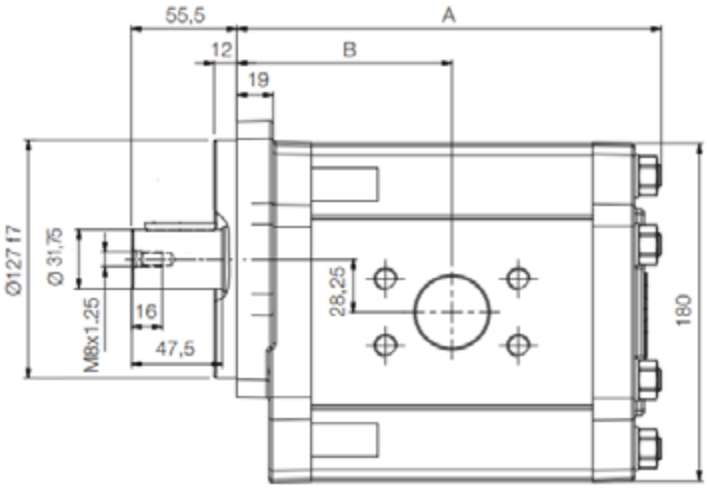

PG330 SERIE

- CLOCKWISE ROTATION
- SAE B -2/4 BOLT MOUNTING
- 7/8-13T SPLINED SHAFT

ALSO AVAILABLE

- COUNTERCLOCKWISE ROTATION
- OTHER SHAFTS & FLANGES
- TANDEM PUMPS & MULTIPLE PUMPS
- OUTBOARD BEARING

PART NUMBER	DISPLACEMENT IN^3 *(CM^3)* / REV.	DIMENSION A (IN)	GPM @ 1800 RPM	MAX RPM	MAX PSI	PORTS	
						INLET	OUTLET
6151 0000 2	1.43 *(23)*	5.54	6.1	3000	3800	SAE 16	SAE 12
6151 0000 2	1.74 *(29)*	5.70	7.5		4000		
6151 0003 2	2.1 *(34)*	5.88	9		4000		
6151 0001 2	2.46 *(40)*	6	10.6	2700	3800		
6151 0004 2	2.89 *(47)*	6.94	12.5		4000		
6151 0005 2	3.37 *(55)*	7.18	14.5		3800	SAE 20	SAE 16
6151 0006 2	3.92 *(64)*	7.45	16.9	2500	3500		
6151 0007 2	4.48 *(73)*	7.73	19.2		3200		
6151 0008 2	4.91 *(80)*	7.96	21.2		2900		

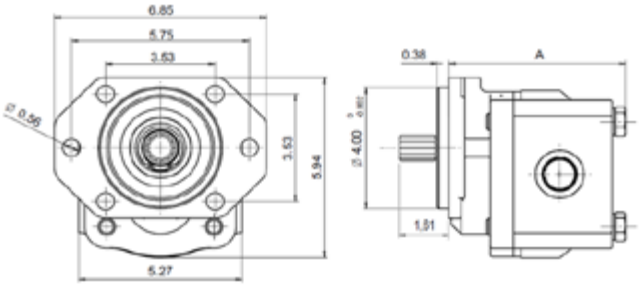

PNC SERIE

- CLOCKWISE ROTATION
- SAE B -2/4 BOLT MOUNTING
- 1 1/4-14T SPLINED SHAFT

ALSO AVAILABLE

- SMALLER DISPLACEMENTS
- COUNTERCLOCKWISE ROTATION
- OTHER SHAFTS & FLANGES
- OUTBOARD BEARING
- TANDEM PUMPS & MULTIPLE PUMPS

PART NUMBER	DISPLACEMENT IN^3 *(CM^3)* / REV.	DIMENSION A (IN)	GPM @ 1800 RPM	MAX RPM	MAX PSI	PORTS	
						INLET	OUTLET
1PNC 125 DG09M	5.08 *(83)*	8.83	39.58	3000	3500	1 1/2" CODE FLANGE 61 (M12 THREAD)	1 1/4" CODE FLANGE 61 (M10 THREAD)
1PNC 150 DG09M	6.1 *(100)*	9.17	47.53			2" CODE FLANGE 61 (M12 THREAD)	1 1/2" CODE FLANGE 61 (M12 THREAD)
1PNC 175 DG09M	7.11 *(116)*	9.48	55.48	2500	3200		
1PNC 200 DG09M	8.13 *(133)*	9.82	63.35	2000	2850		
1PNC 225 DG09M	9.15 *(150)*	*10.13*	71.3	1750	2500		

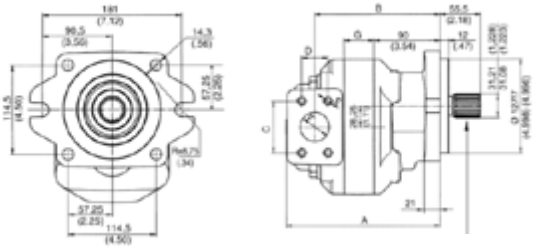

VANE PUMPS V10/V20 SERIES

- FULLY INTERCHANGEABLE WITH VICKERS

ALSO AVAILABLE

- OTHER TYPE OF SHAFTS, PORTS
- COUNTERCLOCKWISE ROTATION
- PRIORITY REAR COVER

V10

V20

PART NUMBER	GPM @ 1800 RPM	MAX		PORT SIZE		SHAFT	MOUNTING
		RPM	PSI	INLET	OUTLET		
V10-1S1S-1C20	1.5	4800	2500	SAE-16	SAE-08	3/4 KEY	SAE A 2 BOLT
V10-1S2S-1C20	3	4500					
V10-1S3S-1C20	4.5	4000					
V10-1S4S-1C20	6	3400					
V10-1S5S-1C20	7.5	3200					
V10-1S6S-1C20	9	3000	2200				
V10-1P7S-1C20	10.5	2800	2000				
V20-1S7S-1C11	10.5	3000	2500	SAE-20	SAE-12		
V20-1S9S-1C11	13.5	2800					
V20-1S11S-1C11	16.5	2400					
V20-1P13P-1C11	19.5						

VANE PUMPS 25VQ/35VQ/45VQ SERIES

- FULLY INTERCHANGEABLE WITH VICKERS

ALSO AVAILABLE

- OTHER TYPE OF SHAFTS, PORTS
- COUNTERCLOCKWISE ROTATION
- DOUBLE & TRIPLE PUMPS

35VQ

3525VQ

PART NUMBER	GPM @ 1800 RPM	MAX		PORT SIZE		SHAFT	MOUNTING
		RPM	PSI	INLET	OUTLET		
25VQ12A-1C20	18	2700	3000	1 1/2 CODE FLANGE 61	1" CODE FLANGE 61	7/8 KEY	SAE B 2 BOLT
25VQ14A-1C20	21						
25VQ17A-1C20	25	2500					
25VQ21A-1C20	31.5						
35VQ25A-1C20	37.5	2500		2" CODE FLANGE 61	1 1/4 CODE FLANGE 61	1 1/4 KEY	SAE C 2 BOLT
35VQ30A-1C20	45						
35VQ35A-1C20	52.5	2400					
35VQ38A-1C20	57						
45VQ42A-1C20	63	2200	2500	3" CODE FLANGE 61	1 1/2 CODE FLANGE 61		
45VQ50A-1C20	75						
45VQ60A-1C20	90						

VP SINGLE OR DOUBLE VARIABLE DISPLACEMENT VANE PUMPS

- FULLY ADJUSTABLE FLOW AND PRESSURE COMPENSATOR. HIGH EFFICIENCY, LOW TEMPERATURE AND ENERGY-SAVING DESIGN
- VERY LOW NOISE, QUICK RESPONSE AND STEADY OPERATION
- ADJUSTMENT SCREWS FOR BOTH PRESSURE SETTING AND MAXIMUM FLOW SETTINGS

SPEED : MINIMUM : 800 RPM, MAXIMUM : 1800 RPM
DRAIN MUST BE INSTALLED UNDER OIL LEVEL AND BELOW 7 PSI
PIPE LENGTH SHOULD BE SHORTER THAN 3 FT
INDEPENDENT RETURN LINE TO TANK REQUIRED

MODEL CODE

SINGLE VPSF X X X

DISPLACEMENT | PSI RANGE | SHAFT SIGN

DOUBLE VPDF X X X X X

DISPLACEMENT FRONT PUMP | PSI RANGE FRONT PUMP | DISPLACEMENT BACK PUMP | PSI RANGE BACK PUMP | SHAFT SIGN

DISPLACEMENT

CODE	L/MIN (GPM) @1800 RPM
12	12 (3)
15	15 (4)
20	20 (5.3)
30	30 (8)
40	40 (10.5)

PSI RANGE

CODE	PSI RANGE
A	140-280
B	215-500
C	425-780
D	710-1000

SHAFT SIGN

CODE	SHAFT SIGN
NO MARK	PARALLEL KEY SHAFT
S	SPLINE SHAFT

SINGLE

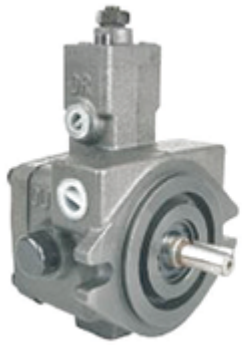

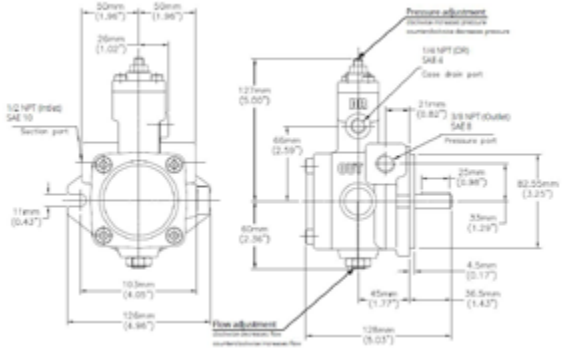

DOUBLE

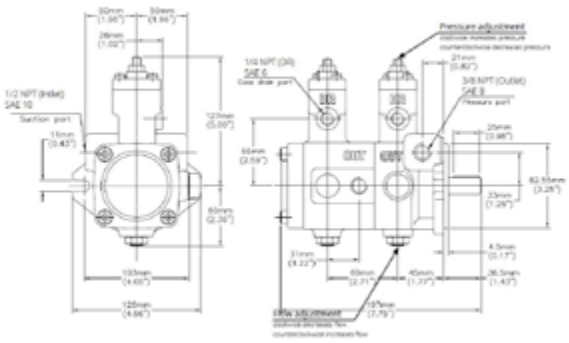

PPV VARIABLE DISPLACEMENT PUMPS

- SPECIFICALLY DESIGNED FOR THE NEEDS OF THE TRUCK MARKET
- WELL ADAPTED FOR APPLICATIONS IN : CRANES, REFUSE VEHICLES, SALT SPREADERS, SNOW EQUIPEMENT, CONSTRUCTION EQUIPEMENT AND TIPPER TRUCKS
- EXTREMELY COMPACT IN SIZE TO ALLOW DIRECT MOUNTING ON VEHICLE ENGINE OR PTO'S

DISPLACEMENT IN^3 *(CM^3)* / REV.	GPM @ 1800 RPM	MAX	
		PSI	RPM
3.66 *(60)*	28.5	5435	2500
4.58 *(75)*	35.7		2400
5.59 *(90)*	43.6		2300
6.71 *(110)*	52.3		2200
7.90 *(130)*	61.8		2100

TANDEM SX

TANDEM DX

BENT AXIS FIXED DISPLACEMENT PUMPS

- BENT AXIS PISTON PUMP FOR TRUCKS
- 4 BOLT SAE B & SAE C MOUNTING
- FROM 0.73 IN (12 CC) TO 7.93 IN (130 CC)
- PRESSURES UP TO 6000 PSI

THE FAMOUS RANGE OF OUR BENT AXIS PISTON PUMPS “HDS”, WELL-KNOWN FOR ITS RELIABILITY AND HIGH EFFICIENCY, IS NOW INCLUDING THE NEW 130CC DISPLACEMENT.

THE ORDER CODES ARE THE FOLLOWING:

- ISO VERSION: **601-001-11303** RIGHT ROTATION
  601-001-11309 LEFT ROTATION
- ISO/SAE VERSION: **601-001-51303** RIGHT ROTATION
  601-001-51309 LEFT ROTATION

A10V VARIABLE DISPLACEMENT PUMPS

TECHNICAL SPECIFICATIONS

- SWASHPLATE AXIAL PISTON PUMP
- GOOD SUCTION CHARACTERISTICS
- COMPACT, LIGHTWEIGHT, LOW NOISE
- LONG SERVICE LIFE, HIGH PRECISION BEARINGS
- AXIAL AND RADIAL LOAD CAPACITY

MAXIMUM OPERATING PRESSURE

NOMINAL: 4060 PSI (280 BAR)

INTERMITTENT: 4560 PSI (315 BAR)

PEAK: 5075 PSI (350 BAR)

MAXIMUM CASE DRAIN PRESSURE: 29 PSI (2 BAR)

SUCCION PRESSURE RANGE: 11.6 - 435 PSI (0.8 - 30 BAR) ABSOLUTE

FEATURES

- PRESSURE COMPENSATOR WITH LOAD SENSE CONTROL (DFR)
- VOLUME STOP
- CLOCKWISE ROTATION
- SIDE PORTS WITH CODE 61 FLANGES
- BUNA SEALS

ALSO AVAILABLE

- MANY CONTROLS SUCH AS: REMOTE COMPENSATOR (DRG) AND COMPENSATOR WITH HORSEPOWER LIMITER (DFLR)
- COUNTERCLOCKWISE ROTATION
- END PORTS WITH CODE 61 OR 62 FLANGES
- VITON SEALS
- OTHER MOUNTING FLANGES AND SHAFTS

DISPLACEMENT IN^3 (CM^3) / REV.	GPM @ 1800 RPM	MAX RPM	MOUNTING FLANGE	PORTS CODE FLANGE 61	DRAIN PORT	SHAFT	PART NUMBER
1.1 *(18)*	8.5	3300	SAE-A 2 BOLT	INLET: 1" OUTLET: 3/4"	SAE 06	3/4" KEY	A10VS0-18-DFR-31-R-P-K-C62N00
						3/4-SPLINE	A10VS0-18-DFR-31-R-P-S-C62N00
1.71 *(28)*	13	3000	SAE-B 2 BOLT	INLET: 1 1/4" OUTLET: 1"	SAE 08	7/8" KEY	A10VS0-28-DFR-31-R-P-K-C62N00
						7/8" SPLINE	A10VS0-28-DFR-31-R-P-S-C62N00
2.75 *(45)*	21	2600		INLET: 1 1/2" OUTLET: 1"	SAE 10	1" KEY	A10VS0-45-DFR-31-R-P-K-C62N00
						1" SPLINE	A10VS0-45-DFR-31-R-P-S-C62N00
4.33 *(71)*	33.5	2200	SAE-C 2 BOLT	INLET: 2" OUTLET: 1"		1 1/4" KEY	A10VS0-71-DFR-31-R-P-K-C62N00
						1 1/4" SPLINE	A10VS0-71-DFR-31-R-P-S-C62N00
6.10 *(100)*	47	2000		INLET: 2 1/2"	SAE 12	1 1/2" KEY	A10VS0-100-DFR-31-R-P-K-C62N00
				OUTLET: 1 1/4"		1 1/2" SPLINE	A10VS0-100-DFR-31-R-P-S-C62N00
8.54 *(140)*	66.5	1800	SAE-D 4 BOLT	INLET: 2 1/2"		1 3/4" KEY	A10VS0-140-DFR-31-R-P-K-C62N00
				OUTLET: 1 1/4"		1 3/4" SPLINE	A10VS0-140-DFR-31-R-P-S-C62N00

PTO PUMPS

- SLIPS ONTO TRACTOR PTO SHAFT (NO GEARBOX REQUIRED)
- 2000 PSI MAXIMUM PRESSURE
- BARBED ADAPTOR FOR HOSE INCLUDED
- FEMALE PIPE ADAPTOR FOR 3/4 NPT INCLUDED

PART NUMBER	HP @ 2000 PSI	2000 PSI		INLET	OUTLET	SHAFT	DIM E
		RPM	GPM				
HC-PTO-1A	32	540	21	SAE 16	SAE 12	1 3/8 - 6 T	6.35"
HC-PTO-9A	27		17				5.97"
HC-PTO-2A	18		11				5.60"
HC-PTO-7A	12		7				5.23"
HC-PTO-3A	34	1000	22.5			1 3/8 - 21 T	5.60"
HC-PTO-8A	27		13.5				5.23"

GEAR BOX / PUMP ASSEMBLY

- SLIPS ONTO 540 RPM TRACTOR PTO SHAFTS
- ADAPTS TO 1 3/8 - 6T SPLINE SHAFT
- OTHER PUMPS FLOW AVAILABLE UPON REQUEST

PART NUMBER	HP @ 2000 PSI	GPM	MAX PSI	INLET	OUTLET
2.5PB-PTO-38D	25.4	19.2	2500	SAE 16	SAE 12
2.5PB-PTO-32D	21.4	16.3	3300		
2.5PB-PTO-22D	14.7	11	3600		

PTO

- NEW COMPLETE LINE ADAPTED TO YOUR NEED
- PTO'S WITH SAE B OUTPUT VERSION NOW AVAILABLE
- COMPATIBLE FOR FOLLOWING TRANSMISSIONS AND MOTORS : EATON, ALLISON, FORD, MACK, VOLVO AND OTHERS
- SEND US YOUR REQUEST

2 STAGES PUMPS

- IDEAL FOR LOGSPLITTERS
- CLOCKWISE ROTATION
- 3600 RPM MAX SPEED
- UNLOAD PRESSURE SET TO 650 PSI (400-900 PSI RANGE)
- 1" TUBE INLET

PART NUMBER	GPM @ 3600 RPM		SHAFT	MOUNTING FLANGE	OUTLET PORT
	HIGH SPEED LOW PRESSURE	LOW SPEED HIGH PRESSURE			
CBN-8.8/3.0	11	2.8	1/2 KEY	SAE AA - 4 BOLT	1/2 NPT
CBN-13/4.2	16	4			
CBDN-16/7	22	6	5/8 KEY	SAE A - 2 BOLT	3/4 NPT
CBDN-22/7	28	6			

HAND PUMPS

- TEMPERATURE -30° + 110° C (NBR)
- CAST IRON BLACK
- OPTIONAL : MANUAL RELEASE, RELIEF VALVE, PRESSURE GAUGE

MODEL CODE

EXEMPLE HP 25 S RV 04L H

- HP → PRODUCT TYPE
- 25 → CAPACITY (CC)
- S → RELEASE
  - S = RELEASE FOR SINGLE ACTING
  - D = 4 WAY 2 POSITIONS FOR DUAL ACTING CIRCUTS
- RV → RV = WITH RELIEF
- 04L → TANK SIZE
- H → H = WITH HANDLE

25 CC

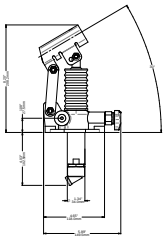

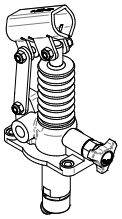

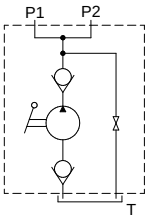

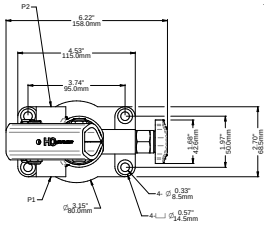

45 CC

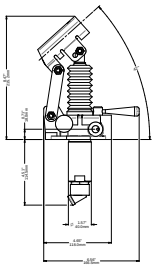

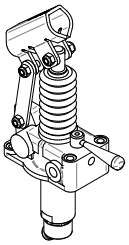

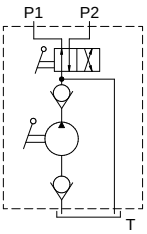

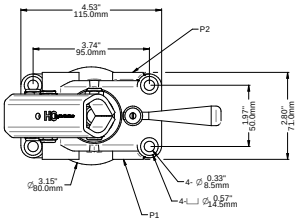

DISPLACEMENT (CC)	MAX PSI	FULL LOAD (CC)	PULL (CC)	PUSH (CC)
25	4351	25	13.4	11.6
45	3916	45	23.7	21.3

CAPACITY (LITER)	DIMENSIONS (MM)		
	A	B	C
1	150	100	120
1.5	150	100	120
2	150	100	185
3	150	100	255
5	175	175	200
7	175	175	275
10	175	175	380
16	230	230	350

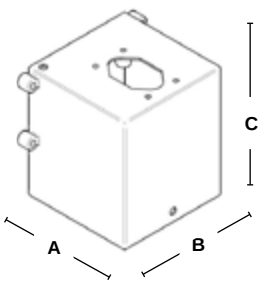

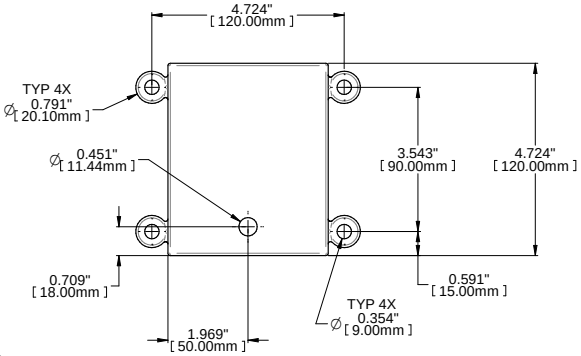

TPV 1000

VARIABLE DISPLACEMENT CLOSED LOOP SYSTEM AXIAL PISTON PUMPS

FEATURES:

- HIGH ROTATION SPEED
- COMPACT DESIGN
- SUITABLE FOR MULTIPLE PUMP ASSEMBLY

ACCESSORIES:

- BY-PASS VALVE
- CONTROL LEVER WITH OR WITHOUT RETURN SPRING
- HYDRAULIC SERVO-CONTROL
- ELECTRO-PROPORTIONAL SERVO-CONTROL
- PURGE VALVE
- SAE-A OR SAE-B (ONLY SERVO) MOUNTING
- SCREW BY-PASS

DISPLACEMENT IN³ (CM³) / REV.	RATED PRESSURE PSI	PEAK PRESSURE PSI	MAXIMUM RPM	WEIGHT KG *(LB)*
6 *(0.37)*	3045	4350	3600	8,8 *(19)*
0.49 *(8)*				
0.55 *(9)*				
0.67 *(11)*				
0.73 *(12)*				
0.79 *(13)*				
0.9 *(15)*		4060		
1.0 *(17)*				
1.1 *(18)*		3915		
1.2 *(19)*	2900	3625	3200	
1.3 *(21)*				

TPV 1200

VARIABLE DISPLACEMENT CLOSED LOOP SYSTEM AXIAL PISTON PUMPS

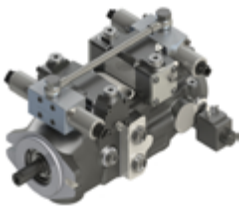

FEATURES:

- LOW NOISE LEVEL
- HIGH ROTATION SPEED
- COMPACT DESIGN AND REDUCED LENGTH
- SUITABLE FOR MULTIPLE PUMP ASSEMBLY

ACCESSORIES:

- AUXILIARY GEAR PUMPS GROUP 1-2
- CONTROL LEVER WITH OR WITHOUT RETURN SPRING
- HYDRAULIC SERVO-CONTROL
- ELECTRO-PROPORTIONAL SERVO-CONTROL
- MAN ON BOARD
- PURGE VALVE
- SAE-A OR SAE-B (ONLY SERVO) MOUNTING
- SCREW BY-PASS

DISPLACEMENT IN³ (CM³) / REV.	RATED PRESSURE PSI	PEAK PRESSURE PSI	MAXIMUM RPM	WEIGHT KG *(LB)*
0.37 *(6)*	3045	4350	3600	19 *(42)*
0.49 *(8)*				
0.55 *(9)*				
0.67 *(11)*				
0.73 *(12)*				
0.79 *(13)*				
0.9 *(15)*		4060		
1.0 *(17)*				
1.1 *(18)*		3915		
1.2 *(19)*	2900	3625	3200	
1.3 *(21)*				

TPVTC 1500

VARIABLE DISPLACEMENT CLOSED LOOP SYSTEM AXIAL PISTON PUMPS

NEW PRODUCTS

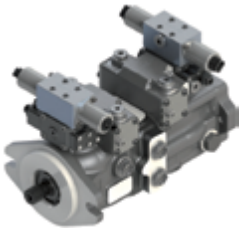

FEATURES:

- LOW NOISE LEVEL
- HIGH ROTATION SPEED
- HIGH POWER DENSITY
- COMPACT DESIGN
- SUITABLE FOR MULTIPLE PUMP ASSEMBLY
- BUILT-IN PRESSURE RELIEF VALVES

ACCESSORIES:

- AUXILIARY GEAR PUMPS GROUP 2 SAE-A
- HYDRAULIC SERVO-CONTROL
- HYDRAULIC SERVO-CONTROL WITH FEED BACK
- ELECTRO-PROPORTIONAL SERVO-CONTROL
- ELECTRO-PROPORTIONAL SERVO-CONTROL WITH FEED BACK
- MANUAL LEVER SERVO-CONTROL WITH FEED BACK
- MAN ON BOARD
- PURGE VALVE
- SAE-B MOUNTING
- SCREW BY-PASS
- SENSORS AND TRANSDUCERS AVAILABLE ON REQUEST

DISPLACEMENT IN³ (CM³) / REV.	RATED PRESSURE PSI	PEAK PRESSURE PSI	MAXIMUM RPM	WEIGHT KG *(LB)*
1.0 *(17)*	*5075*	*5800*	3600	14 *(31)*
1.1 *(18)*				
1.2 *(19)*				
1.3 *(21)*				

TPV 3200

VARIABLE DISPLACEMENT CLOSED LOOP SYSTEM AXIAL PISTON PUMPS

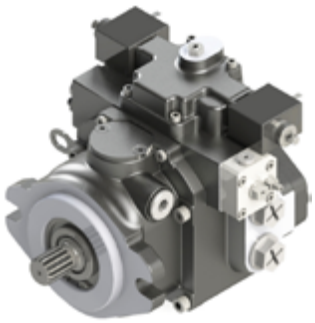

FEATURES:

- HIGH ROTATION SPEED
- COMPACT DESIGN
- SUITABLE FOR MULTIPLE PUMP ASSEMBLY

ACCESSORIES:

- MANUAL DISPLACEMENT SERVO-CONTROL
- HYDRAULIC PROPORTIONAL SERVO-CONTROL
- ELECTRO-PROPORTIONAL SERVO-CONTROL
- AUTOMOTIVE
- SPECIAL VERSIONS
- SAE-B MOUNTING

DISPLACEMENT IN³ (CM³) / REV.	RATED PRESSURE PSI	PEAK PRESSURE PSI	MAXIMUM RPM	WEIGHT KG *(LB)*
1.3 *(21)*	*3625*	*5075*	3600	*22 (48)*
1.7 *(28)*				

TPV 3600

VARIABLE DISPLACEMENT CLOSED LOOP SYSTEM AXIAL PISTON PUMPS

FEATURES:

- LOW NOISE LEVEL
- HIGH ROTATION SPEED
- HIGH POWER DENSITY
- COMPACT DESIGN
- SUITABLE FOR MULTIPLE PUMP ASSEMBLY
- BUILT-IN PRESSURE RELIEF VALVES

ACCESSORIES:

- AUXILIARY GEAR PUMPS GROUP 2 SAE-A AND GROUP 3 SAE-B
- HYDRAULIC SERVO-CONTROL
- HYDRAULIC SERVO-CONTROL WITH FEED BACK
- ELECTRO-PROPORTIONAL SERVO-CONTROL
- ELECTRO-PROPORTIONAL SERVO-CONTROL WITH FEED BACK
- MANUAL LEVER SERVO-CONTROL WITH FEED BACK
- MAN ON BOARD
- PURGE VALVE
- SAE-B MOUNTING
- SCREW BY-PASS
- PRESSURE CUT-OFF
- SENSORS AND TRANSDUCERS AVAILABLE ON REQUEST

DISPLACEMENT IN³ (CM³) / REV.	RATED PRESSURE PSI	PEAK PRESSURE PSI	MAXIMUM RPM	WEIGHT KG *(LB)*
1.6 *(26)*	*5075*	*6525*	3600	28 *(62)*
1.7 *(28)*				
1.8 *(30)*				
1.9 *(31)*				
2.0 *(32)*				
2.1 *(34)*				
2.2 *(36)*				
2.3 *(38)*				

TPV 4300

VARIABLE DISPLACEMENT CLOSED LOOP SYSTEM AXIAL PISTON PUMPS

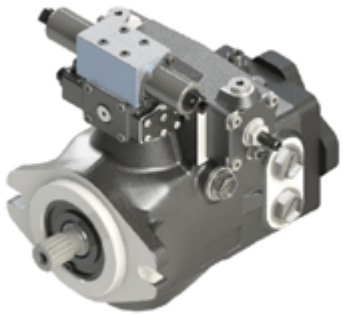

FEATURES:

- HIGH ROTATION SPEED
- COMPACT DESIGN
- SUITABLE FOR MULTIPLE PUMP ASSEMBLY
- BUILT-IN PRESSURE RELIEF VALVES

ACCESSORIES:

- HYDRAULIC SERVO-CONTROL
- ELECTRO-PROPORTIONAL SERVO-CONTROL
- SAE-B MOUNTING
- MAN ON BOARD
- SCREW BY-PASS
- SPECIAL VERSIONS

DISPLACEMENT IN³ (CM³) / REV.	RATED PRESSURE PSI	PEAK PRESSURE PSI	MAXIMUM RPM	WEIGHT KG *(LB)*
2.0 *(32)*	*3625*	*5057*	3600	23 *(51)*
2.3 *(38)*				
2.7 *(45)*				
3.1 *(50)*				

TPV 5000

VARIABLE DISPLACEMENT CLOSED LOOP SYSTEM AXIAL PISTON PUMPS

FEATURES:

- HIGH ROTATION SPEED
- COMPACT DESIGN
- SUITABLE FOR MULTIPLE PUMP ASSEMBLY

ACCESSORIES:

- MANUAL DISPLACEMENT SERVO-CONTROL
- HYDRAULIC PROPORTIONAL SERVO-CONTROL
- ELECTRO-PROPORTIONAL SERVO-CONTROL
- AUTOMOTIVE
- SPECIAL VERSIONS
- SAE-B MOUNTING

DISPLACEMENT IN³ (CM³) / REV.	RATED PRESSURE PSI	PEAK PRESSURE PSI	MAXIMUM RPM	WEIGHT KG *(LB)*
2.8 *(46)*	*4350*	*5800*	3600	29 *(64)*
3.1 *(50)*				
3.9 *(64)*				

TPV 9000

VARIABLE DISPLACEMENT CLOSED LOOP SYSTEM AXIAL PISTON PUMPS

FEATURES:

- HIGH ROTATION SPEED
- HIGH PRESSURE
- HIGH PERFORMANCES
- COMPACT DESIGN

ACCESSORIES:

- MANUAL DISPLACEMENT SERVO-CONTROL
- HYDRAULIC PROPORTIONAL SERVO-CONTROL
- ELECTRO-PROPORTIONAL SERVO-CONTROL
- SAE-C MOUNTING

DISPLACEMENT IN³ (CM³) / REV.	RATED PRESSURE PSI	PEAK PRESSURE PSI	MAXIMUM RPM	WEIGHT KG *(LB)*
3.4 *(55)*	*5800*	*6525*	4000	55 *(121)*
72 *(4.4)*			4100	68 *(150)*
90 *(5.5)*			4000	
110 *(6.7)*			3800	

BM20
SPOOL : 1-7
FLOW : 5.2 GPM
MAX PRESSURE : 4700 PSI ---------- P.96

BF40
SPOOL : 1-6
FLOW : 10.5 GPM
MAX PRESSURE : 4700 PSI ---------- P.100

MB2
SPOOL : 1
FLOW : 12 GPM
MAX PRESSURE : 3600 PSI ---------- P.96

MB3
SPOOL : 2-7
FLOW : 12 GPM
MAX PRESSURE : 4600 PSI ---------- P.96

VDM6A
SPOOL : 1-7
FLOW : 12 GPM
MAX PRESSURE : 5400 PSI ---------- P.98

BM50
SPOOL : 8
FLOW : 13 GPM
MAX PRESSURE : 4700 PSI ---------- P.96

VDM6
FLOW : 15 GPM
MAX PRESSURE : 5000 PSI ---------- P.97

MB4
SPOOL : 1-6
FLOW : 16 GPM
MAX PRESSURE : 4600 PSI ---------- P.98

BF70
SPOOL : 1-6
FLOW : 18.5 GPM
MAX PRESSURE : 4700 PSI ---------- P.100

RD500 & RD2500
SPOOL : 1-3
FLOW : 20 GPM
MAX PRESSURE : 3000 PSI P.99

MB5
SPOOL : 1-6
FLOW : 21 GPM
MAX PRESSURE : 4600 PSI P.98

BF90
SPOOL : 1
FLOW : 24 GPM
MAX PRESSURE : 4700 PSI P.100

VDM8
SPOOL : 1-5
FLOW : 24 GPM
MAX PRESSURE : 5000 PSI P.100

BM100
SPOOL : 1-3
FLOW : 26 GPM
MAX PRESSURE : 4700 PSI P.101

BM50
SPOOL : 1-8
FLOW :13 GPM
MAX PRESSURE : 4700 PSI P.96

BM150/180
SPOOL : 1
FLOW : 40 / 48 GPM
MAX PRESSURE : 4700 PSI P.101

TIPPING VALVES
FLOW : MODULAR 150/200/250
MAX PRESSURE : 5800 PSI
P.101

BM250 TIPPING VALVE
FLOW : 66 GPM
MAX PRESSURE : 5800 PSI P.101

BM20 MANUAL VALVES

- OUR SMALLEST MANUAL VALVE
- ZINC COATED
- DOUBLE ACTING SPOOL, SPRING RETURN WITH LEVERS
- RELIEF SET TO 2550 PSI
- HANDLES INCLUDED
- POWER BEYOND OPTION
- OPEN/CLOSED CENTER

PART NUMBER	NB OF SPOOL	GPM MAX	PSI MAX	PORTS
902457	1	5.2	4700	P, T, A, B: SAE-06 P2 & T2: SAE-08
902458	2			
902459	3			
90211008	4			
90211009	5			
902110010	6			
902110011	7			

MB2 MANUAL VALVES

- BLACK PAINTED
- DOUBLE ACTING SPOOL, SPRING RETURN WITH LEVERS
- OPEN/CLOSED CENTER. POWER BEYOND OPTION
- HANDLES INCLUDED
- RELIEF SET TO 2550 PSI
- OPEN CENTER ONLY, NO POWER BEYOND

FITS "SD4" WALVOIL FOOTPRINT

LOTS OF OPTIONS AVAILABLE

PART NUMBER	NB OF SPOOL	GPM MAX	PSI MAX	PORTS
MB2/1S-3/18L/E8-M1	1	12	3600	SAE-08

MB3 MANUAL VALVES

- BLACK PAINTED
- DOUBLE ACTING SPOOL, SPRING RETURN WITH LEVERS
- OPEN/CLOSED CENTER
- POWER BEYOND OPTION
- HANDLES INCLUDED
- RELIEF SET TO 2550 PSI

FITS "SD5" WALVOIL FOOTPRINT

LOTS OF OPTIONS AVAILABLE

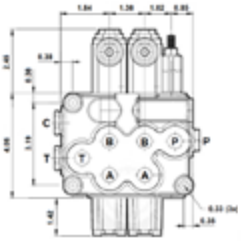

PART NUMBER	NB OF SPOOL	GPM MAX	PSI MAX	PORTS
MB3/1S-3/18L/E8-M1	1	12	4600	SAE-08
MB3/2S-3/18L/E8-M2	2			
MB3/3S-3/18L/E8-M3	3			
MB3/4S-3/18L/E8-M4	4			
MB3/5S-3/18L/E8-M5	5			
MB3/6S-3/18L/E8-M6	6			
MB3/7S-3/18L/E8-M7	7			

ALSO AVAILABLE

- MOTOR AND SINGLE ACTING SPOOL
- DETENT, FLOAT CONTROL
- ELECTRIC, AIR AND CABLE CONTROLS
- 2 AXIS JOYSTICK
- LIMIT SWITCH

BM50 8 SPOOL MANUAL VALVES

- DOUBLE ACTING SPOOL, SPRING RETURN WITH LEVERS
- OPEN/CLOSED CENTER
- HANDLES INCLUDED
- RELIEF SET TO 2550 PSI

PART NUMBER	NB OF SPOOL	GPM MAX	PSI MAX	PORTS
BM50/8	8	13	4700	SAE-08
BM50/8+2 JOYSTICK				

VDM6 MANUAL VALVES

- DOUBLE ACTING SPOOL, SPRING RETURN WITH LEVERS
- OPEN / CLOSED CENTER, POWER BEYOND OPTION
- HANDLES INCLUDED
- RELIEF SET AT 2550 PSI

PART NUMBER	NB OF SPOOL	GPM MAX	PSI MAX	PORTS
623100110	1	15	5000	P, A & B: SAE-08 T: SAE-10
623100120	2			
623100130	3			
623100140	4			
623100150	5			
623100160	6			
623105500	7			

623100131

OTHER POPULAR VALVES

PART NUMBER	DESCRIPTION
623108010	1 D.A. SPOOL ELECTRIC 12V WITH LEVERS
623106980	2 D.A. SPOOLS ELECTRIC 12V WITH LEVERS
623106330	1 D.A. DETENT KICK-OUT SPOOL, 1 S.A SPOOL
623107980	1 FLOATING SPOOL, 1 D.A. SPOOL C/W JOYSTICK
623108191	7 SPOOL D.A C/W 2 JOYTSICK, SAE-06 ON A &B PORTS

623108190

POPULAR PARTS

PART NUMBER	DESCRIPTION
R23400320	DETENT KIT IN & OUT
R23400210	SPOOL SEAL KIT (PER SPOOL)
R23400221	SPRING RETURN KIT
R23400060	LEVER BOX
795428901	POWER BEYOND & CLOSE CENTER PLUG

623106980

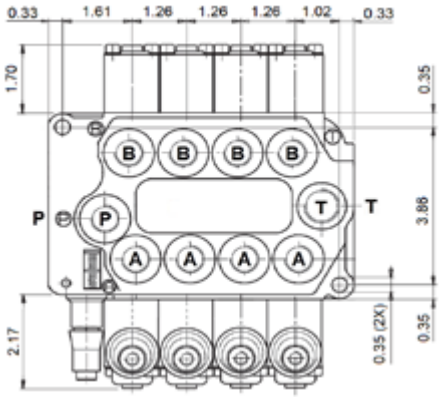

VDM6A MANUAL VALVES

- LOADCHECK ON EVERY SECTION
- POSSIBILITY FOR PORT RELIEFS
- DOUBLE ACTING SPOOL, SPRING RETURN WITH LEVERS
- OPEN/CLOSED CENTER. POWER BEYOND OPTION
- HANDLES INCLUDED
- RELIEF SET TO 2550 PSI

PART NUMBER	NB OF SPOOL	GPM MAX	PSI MAX	PORTS
625033600	2	12	5400	P, A & B: SAE-08 T: SAE-10
625033700	3			
625033800	4			
625034100	5			
625034200	6			
625034300	7			

MB4 MANUAL VALVES

- BLACK PAINTED
- DOUBLE ACTING SPOOL, SPRING RETURN WITH LEVERS
- OPEN/CLOSED CENTER. POWER BEYOND OPTION
- HANDLES INCLUDED
- RELIEF SET TO 2550 PSI

PART NUMBER	NB OF SPOOL	GPM MAX	PSI MAX	PORTS
MB4/1S-3/18L/E8-M3	1	16	4600	SAE-08
MB4/2S-3/18L/E8-M3	2			
MB4/3S-3/18L/E8-M3	3			
MB4/4S-3/18L/E8-M3	4			
MB4/5S-3/18L/E8-M3	5			
MB4/6S-3/18L/E8-M3	6			

LOTS OF OPTIONS AVAILABLE

FITS "HCD10"
HYDROCONTROL FOOTPRINT

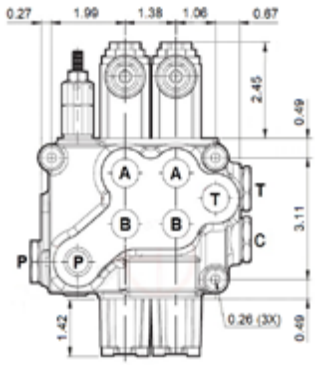

MB5 MANUAL VALVES

- BLACK PAINTED
- DOUBLE ACTING SPOOL, SPRING RETURN WITH LEVERS
- OPEN/CLOSED CENTER. POWER BEYOND OPTION
- HANDLES INCLUDED
- RELIEF SET TO 2550 PSI

PART NUMBER	NB OF SPOOL	GPM MAX	PSI MAX	PORTS
MB5/1S-3/18L/E8-M3	1	21	4600	P&T:SAE-12 A&B:SAE-10
MB5/2S-3/18L/E8-M3	2			
MB5/3S-3/18L/E8-M3	3			
MB5/4S-3/18L/E8-M3	4			
MB5/5S-3/18L/E8-M3	5			
MB5/6S-3/18L/E8-M3	6			

LOTS OF OPTIONS AVAILABLE

FITS "SD11"
WALVOIL FOOTPRINT

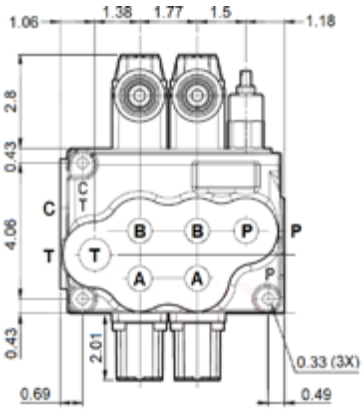

RD500 & RD2500 MANUAL VALVES

- 3000 PSI MAXIMUM PRESSURE
- DOUBLE ACTING SPOOLS

PART NUMBER	NB. OF SPOOL	GPM MAX	PORTS	DESCRIPTION	GRESEN/ PARKER EQUIVALENT
RD2575-T4-ESA1	1	20	P&T: 3/4 NPT A&B: 1/2 NPT	SPRING RETURN	400
RD2575-T4-EDA1				3 POSITION DETENT	410
RD512-CA-5A4B1		30		SPRING RETURN	SP-4-HP
RD512-GC-5A4B1				FLOAT DETENT	SPK-4-HP
RD516-CA-5A4B1			P&T: SAE-12 A&B: SAE-10	SPRING RETURN	SP-4-4-HP
RD526-CCAA-5A4B1	2	25			
RD522-CCAA-5A4B1			P&T: 3/4 NPT A&B: 1/2 NPT		
RD532-CCCAAA-5A4B1	3				SP-4-4-4-HP
RD536-CCCAAA-5A4B1			P&T: SAE-12 A&B: SAE-10		

RD25

RD52

RD53

LOG SPLITTER MANUAL VALVES

PART NUMBER	NB. OF SPOOL	GPM MAX	PSI MAX	PORTS	DESCRIPTION
LS-3000-1	1	25	2750	P&T: 3/4 NPT A&B: 1/2 NPT	PRESSURE RELEASE DETENT, SPOOL OUT POSITION
LS-3000-2				3/4 NPT	
LSV-3000-1			3000	P&T: 3/4 NPT A&B: 1/2 NPT	
RD512-CF-5A4B1		30	3000	P&T: 3/4 NPT A&B: 1/2 NPT	PRESSURE RELEASE DETENT, BOTH POSITION
RD512-CF-5A4B1					PRESSURE RELEASE DETENT, SPOOL OUT POSITION, C/W POWER BEYOND
RD522-CCEA-5A4B1	2				1ST SPOOL: PRESSURE RELEASE DETENT, BOTH POSITION ON 2ND SPOOL: D.A., SPRING RETURN
RD522-CCEE-5A4B1					1ST & 2ND SPOOL: PRESSURE RELEASE DETENT, SPOOL OUT POSITION
RD525-MMEE-5A4B1				P&T: SAE-12 A&B: SAE-10	AUTO-CYCLE C/W POWER BEYOND

LS-3000

LSV-3000-1

LOADER APPLICATION VALVES

- 2 SPOOLS MOUNTED ON A JOYSTICK
- LOAD CHECK ON EACH SECTION
- 1ST SPOOL IS DOUBLE ACTING WITH FLOAT
- 2ND SPOOL IS DOUBLE ACTING WITH REGEN

JOYSTICK HANDLE

THE JOYSTICK HANDLE WILL OPERATE BOTH SPOOLS USING ONE LEVER HANDLE. THE TWO SPOOLS CA BE OPERATED INDEPENDENTLY OR AT THE SAME TIME DEPENDING UPON HANDLE MOVEMENT. BACAUSE WE ALLOW FOR MAXIMUM MOUNTING FLEXIBILITY, WE HAVE 4 OPTIONS FOR THE LVS AND 4 OPTIONS FOR THE LVR. THE HANDLE SHIFT PATTERN FOR ALL IS SHOWN AT RIGHT.

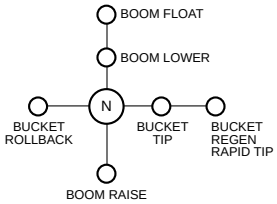

JOYSTICK HANDLE OPERATION LOOKING AT HANDLE KNOB

LVS

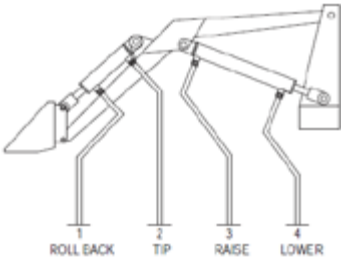

PART NUMBER	NB. OF SPOOL	GPM MAX	PSI MAX	PORTS
LVS-1-A-GR-5-A-1	2	11	3000	P&T: SAE-08 A&B: SAE-06

VDM8 MANUAL VALVES

- LOADCHECK ON EVERY SECTION
- DOUBLE ACTING SPOOL, SPRING RETURN WITH LEVERS
- OPEN/CLOSED CENTER. POWER BEYOND OPTION
- HANDLES INCLUDED
- RELIEF SET TO 2550 PSI

PART NUMBER	NB OF SPOOL	GPM MAX	PSI MAX	PORTS
623200110	1	24	5000	P, A & B: SAE 10 T: SAE 12
623200120	2			
623200130	3			
623200140	4			
623200150	5			

POPULAR PARTS

PART NUMBER	DESCRIPTION
R23500300	DETENT KIT IN & OUT
R20272590	SPOOL SEALKIT (PER SPOOL)
R23575070	SPRING RETURN KIT
R20287910	LEVERBOX
795428901	POWER BEYOND/ CLOSED CENTER (VALVE)
795429300	POWER BEYOND/ CLOSED CENTER (2+ SPOOL VALVE)

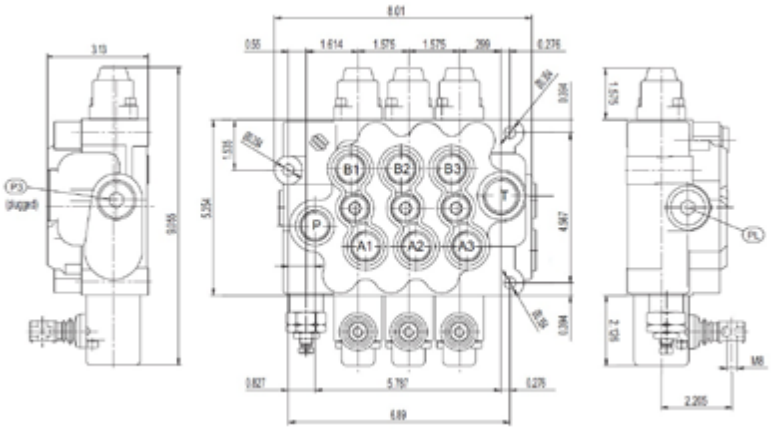

BF40, BF70 & BF90 MANUAL VALVES

INTEGRATED PRESSURE COMPENSATED FLOW CONTROL (SEND EXCESS FLOW TO TANK)

- ZINC COATED
- DOUBLE ACTING SPOOL, SPRING RETURN WITH LEVERS
- OPEN/CLOSED CENTER. POWER BEYOND OPTION
- HANDLES INCLUDED
- RELIEF SET TO 2550 PSI

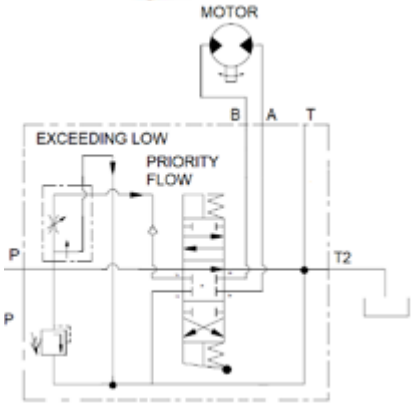

PART NUMBER	NB OF SPOOL	GPM MAX	PSI MAX	PORTS
91411013	1	10.5	4700	SAE 08
914394	2			
91411014	3			
91411015	4			
91411016	5			
91411017	6			
93811005	1	18.5	4700	P, A & B: SAE 10 T: SAE 12
93811006	2			
93811007	3			
93811008	4			
93811009	5			
9381005	1	24	4700	SAE 10

BM100 MANUAL VALVES

- ZINC COATED
- DOUBLE ACTING SPOOL, SPRING RETURN WITH LEVERS
- OPEN/CLOSED CENTER. POWER BEYOND OPTION
- HANDLES INCLUDED
- RELIEF SET TO 2550 PSI

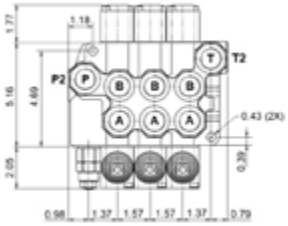

PART NUMBER	NB OF SPOOL	GPM MAX	PSI MAX	PORTS
93011006	1	26	3600	SAE 12
93011008	2			
93011009	3			

MODULAR 150/200/250 TIPPING VALVES

- GALVANIZED BODY AND NICKEL SPOOL
- BUILT-IN CHECK AND ADJUSTABLE SAFETY VALVES (DIRECT TYPE)
- MECHANICAL DIRECT END-OF-STROKE WITH ANTI-SHOCK SPRING
- NODULAR CAST-IRON BODY FOR PRESSURE UP TO 5801 PSI

PART NUMBER	NB OF SPOOL	GPM MAX	PSI MAX	PORTS
121-008-50372	1	40	5800	SAE 12
121-922-00517	1	66	5800	SAE 16

BM250 TIPPING VALVE

- MODULAR CAST-IRON BODY FOR PRESSURE UP TO 5801 PSI
- GALVANIZED BODY AND NICKEL SPOOL
- GUARANTEED FOR OIL TEMPERATURE RANGE -15 + 110°C, VISCOSITY RANGE 12 ÷ 100 cSt AND OIL FILTERING 25 µm

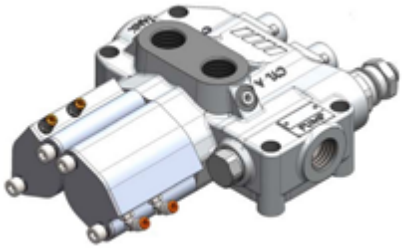

PART NUMBER	NB OF SPOOL	GPM MAX	PSI MAX	PORTS
121-015-00104	1	66	5800	SAE 12

BM150/180 MANUAL VALVES

- ZINC COATED
- DOUBLE ACTING SPOOL, SPRING RETURN WITH LEVERS
- OPEN/CLOSED CENTER. POWER BEYOND OPTION
- HANDLES INCLUDED
- RELIEF SET TO 2550 PSI
- SPECIALLY DESIGNED FOR WINCHES
- AVAILABLE WITH ROTARY LEVERS

ROTARY LEVER	PART NUMBER	SERIE	NB OF SPOOL	GPM MAX	PSI MAX	PORTS
X	92511004	BM150	1	40	4700	P, T, A & B : SAE 12 P2 & T2 : SAE 16
✓	925164					
X	925603	BM180		48		SAE 16
✓	925604					

VD6A
SPOOL : 1-8
MAX GPM : 12
MAX PSI : 5100 ---------- P.103

SN-3
SPOOL : 1-12
MAX GPM : 1
MAX PSI : 4600 ---------- P.108

VD8A
SPOOL : 1-8
MAX GPM : 20
MAX PSI : 5100 ---------- P.104

V20
SPOOL : 1-10
MAX GPM : 20
MAX PSI : 3500 ---------- P.105

SN-4
SPOOL : 1-12
MAX GPM : 21
MAX PSI : 4600 ---------- P.108

SN-5
SPOOL : 1-12
MAX GPM : 32
MAX PSI : 4600 ---------- P.108

VD10A
SPOOL : 1-8
MAX GPM : 97
MAX PSI : 4000 ---------- P.106

SN-6
SPOOL : 1-12
MAX GPM : 37
MAX PSI : 4600 ---------- P.108

VD12A
SPOOL : 1-8
MAX GPM : 63
MAX PSI : 4000 ---------- P.107

SN-8
SPOOL : 1-12
MAX GPM : 63
MAX PSI : 4600 ---------- P.108

VD6A MANUAL VALVES

PART NUMBER	DESCRIPTION	MAXIMUM OPERATING PRESSURE	NOMINAL FLOW (GPM)	PORTS	
				P, A, B	T
VD6A/D/U4S	1 SECTION/DOUBLE ACTING	5000 PSI	15	SAE 8 3/4 -16 UNF	SAE 10 7/8 -14 UNF
VD6A/DD/U4S	2 SECTIONS/DOUBLE ACTING				
VD6A/DDD/U4S	3 SECTIONS/DOUBLE ACTING				
VD6A/DDDD/U4S	4 SECTIONS/DOUBLE ACTING				
VD6A/DDDDD/U4S	5 SECTIONS/DOUBLE ACTING				
VD6A/DDDDDD/U4S	6 SECTIONS/DOUBLE ACTING				

OTHER SPOOLS AVAILABLE FROM STOCK

OPTIONS

PART NUMBER	DESCRIPTION
795429200	PLUG FOR CARRY OVER/POWER BEYOND
R23400590	PORT RELIEF VALVE (2650-4000) OTHER PRESSURES AVAILABLE
R23400540	PORT RELIEF +ANTICAVITATION VALVE (3000-4015) OTHER PRESSURES AVAILABLE
R23400550	ANTICAVITATION VALVE
R23400320	VDM6/VD6A DETENT IN OUT KIT
R23400100	VDM6/VD6A PNEUMATIC PROPORTIONAL KIT
R23100080	VDM6/VD6A HYDRAULIC PROPORTIONAL KIT
R23400033	VD6A/L1-L2 JOYSTICK
R23400036	VD6A//L1-L2 JOYSTICK FOR FLOAT

12 / 24 VDC PUSH PULL OR ELECTRO HYDRAULIC AVAILABLE FROM STOCK

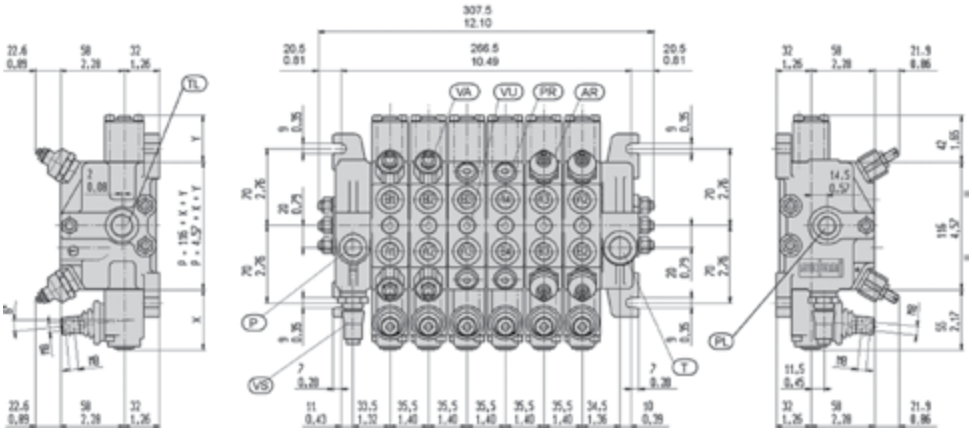

VD8A MANUAL VALVES

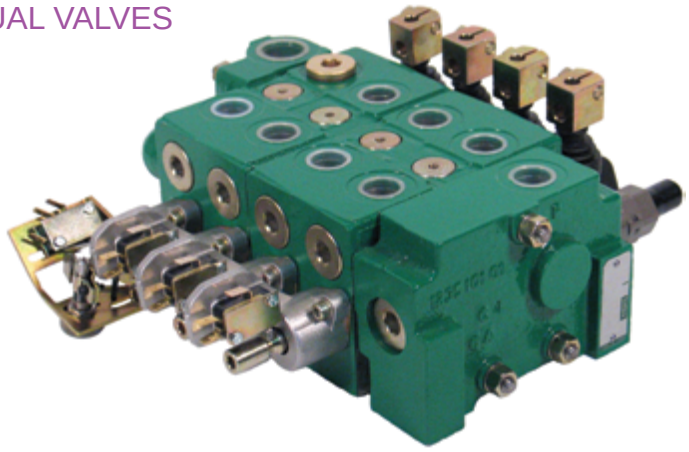

PART NUMBER	DESCRIPTION	MAXIMUM OPERATING PRESSURE	NOMINAL FLOW (GPM)	PORTS	
				P,A,B	T
VD8A/D/U4S	1 SECTION/DOUBLE ACTING	5000 PSI	25	SAE 10 7/8 -14 UNF	SAE 12 1-1/16 -12 UNF
VD8A/DD/U4S	2 SECTIONS/DOUBLE ACTING				
VD8A/DDD/U4S	3 SECTIONS/DOUBLE ACTING				
VD8A/DDDD/U4S	4 SECTIONS/DOUBLE ACTING				
VD8A/DDDDD/U4S	5 SECTIONS/DOUBLE ACTING				
VD8A/DDDDDD/U4S	6 SECTIONS/DOUBLE ACTING				

OTHER SPOOLS AVAILABLE FROM STOCK

OPTIONS

PART NUMBER	DESCRIPTION
R23580020	PLUG FOR CARRY OVER/POWER BEYOND
R23577591	PORT RELIEF VALVE (1915-4160) OTHER PRESSURES AVAILABLE
R23570040	PORT RELIEF +ANTICAVITATION VALVE (1460-5110) OTHER PRESSURES AVAILABLE
R23577511	ANTICAVITATION VALVE
R23500300	VDM8/VD8A DETENT IN OUT KIT
R23575151	VDM8/VD8A PNEUMATIC PROPORTIONAL KIT
R23575322	VDM8/VD8A HYDRAULIC PROPORTIONAL KIT
R23587570	VD8A/L1 JOYSTICK
R23587580	VD8A//L2 JOYSTICK FOR FLOAT

12 / 24 VDC PUSH PULL OR ELECTRO HYDRAULIC AVAILABLE FROM STOCK

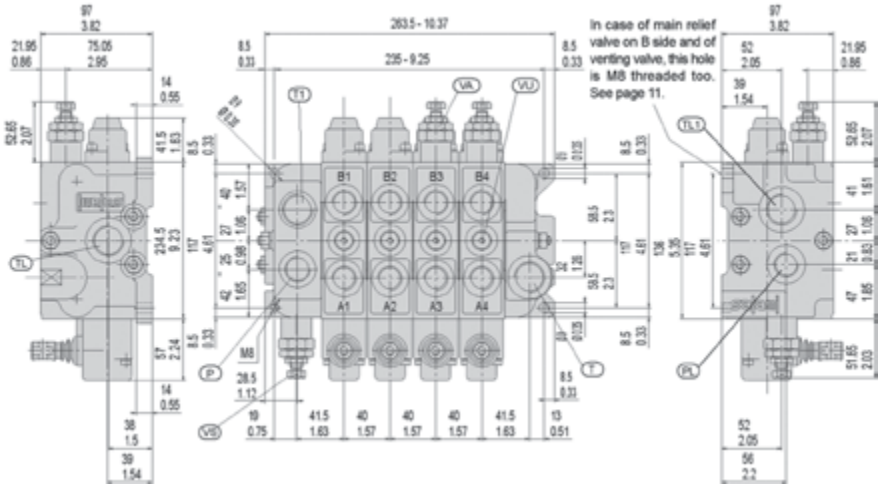

V20 MANUAL VALVES

SECTIONAL V20 VALVE
- 20 GPM MAX
- 3500 PSI MAX PRESSURE
- INTERCHANGEABLE WITH GRESEN V20
- LOAD SENSING AND ELECTRIC VERSIONS ARE AVAILABLE

POPULAR PARTS

PART NUMBER	DESCRIPTION
20I2E	INLET SAE 12 WITH RELIEF 2200-3000 PSI
20P1AA1AA	WORK SECTION SAE 12, SINGLE ACTING, SPRING RETURN, STD HANDLE
20P1BA1AA	WORK SECTION SAE 12, DOUBLE ACTING, SPRING RETURN, STD HANDLE
20P1BE1AA	WORK SECTION SAE 12, DOUBLE ACTING C/W PNEUMATIC ACTUATOR
20P1AE1AA	WORK SECTION SAE 12, SINGLE ACTING C/W PNEUMATIC ACTUATOR
20P1DD1AA	WORK SECTION SAE 12, DOUBLE ACTING C/W 4TH FLOAT POSITION
20E22	OUTLET SAE 12
66040200-X	TIE-ROD (SPECIFY NUMBER OF SECTION "X")
660290004	POWER BEYOND
660190007	STANDARD HANDLE
660190004	3 POSITION DETENT
660290401	PORT RELIEF 500-1350 PSI
660290403	PORT RELIEF 1350-1750 PSI
660290405	PORT RELIEF 1750-2200 PSI
660290407	PORT RELIEF 2200-3000 PSI

NUMBER OF WORK SECTIONS

	1	2	3	4	5	6	7	8
A	2.50	4.25	6.00	7.75	9.50	11.25	13.00	14.75
B	4.88	6.63	8.38	10.13	11.88	13.63	15.38	17.13

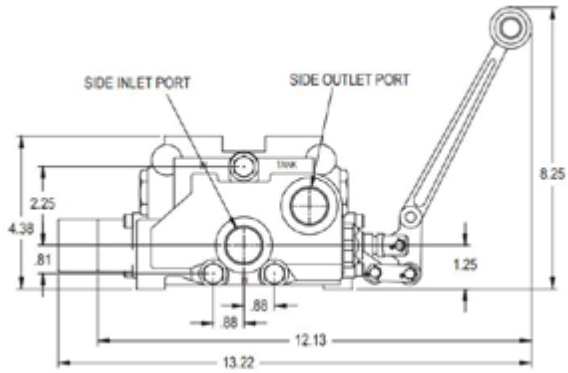

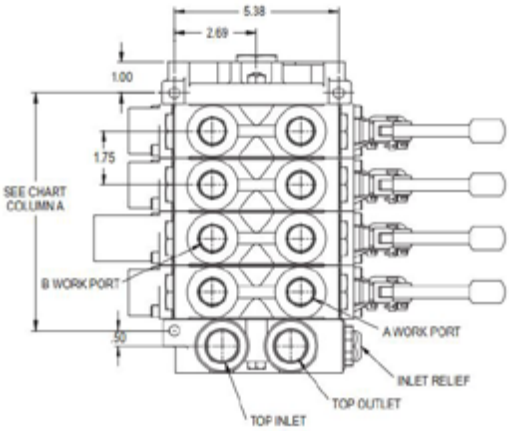

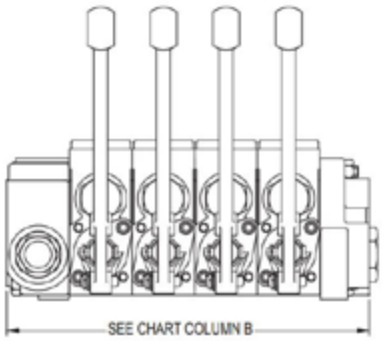

VD10A VALVES

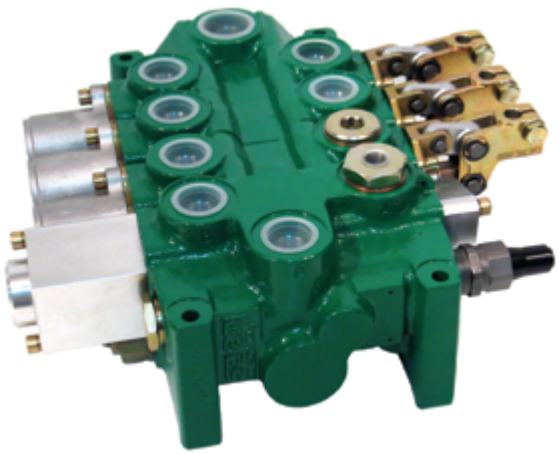

PART NUMBER	DESCRIPTION	MAXIMUM OPERATING PRESSURE	NOMINAL FLOW (GPM)	PORTS
				P,A,B,T
VD10A/D/U4S	1 SECTION/DOUBLE ACTING	4000 PSI	32	SAE 12 1-1/16 - 12 UNF
VD10A/DD/U4S	2 SECTIONS/DOUBLE ACTING			
VD10A/DDD/U4S	3 SECTIONS/DOUBLE ACTING			
VD10A/DDDD/U4S	4 SECTIONS/DOUBLE ACTING			
VD10A/DDDDD/U4S	5 SECTIONS/DOUBLE ACTING			
VD10A/DDDDDD/U4S	6 SECTIONS/DOUBLE ACTING			

OTHER SPOOLS AVAILABLE FROM STOCK

OPTIONS

PART NUMBER	DESCRIPTION
R22080130	PLUG FOR CARRY OVER/POWER BEYOND
R22078390	PORT RELIEF VALVE (3060-5075) OTHER PRESSURES AVAILABLE
R22078360	PORT RELIEF +ANTICAVITATION VALVE (3060-4785) OTHER PRESSURES AVAILABLE
R22078440	ANTICAVITATION VALVE
R22400309	VD10A DETENT IN OUT KIT
R22176330	VD10A PNEUMATIC PROPORTIONAL KIT
R22475079	VD10A HYDRAULIC PROPORTIONAL KIT

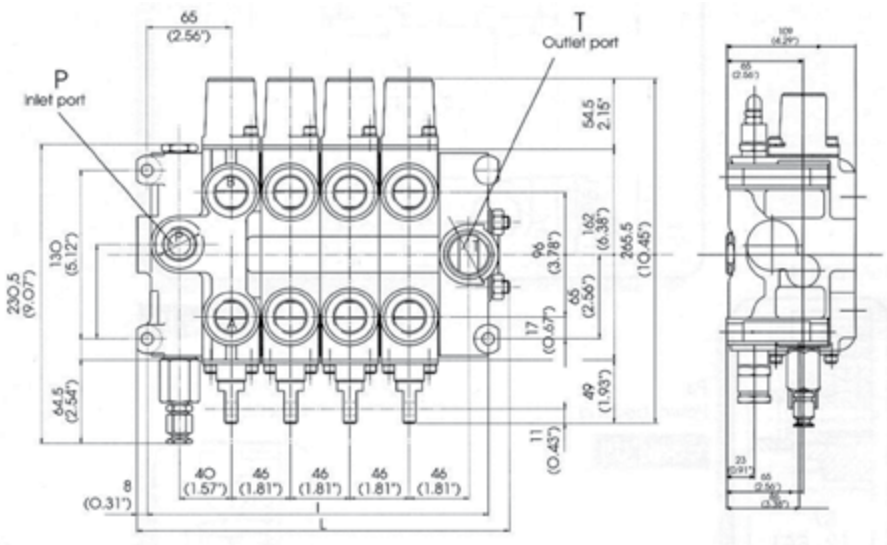

VD12A VALVES

PART NUMBER	PART NUMBER	MAXIMUM OPERATING PRESSURE	NOMINAL FLOW (GPM)	PORTS	
				P,T	A,B
VD12A/D/U4S	1 SECTION/DOUBLE ACTING	4000 PSI	47	SAE 16 1-5/16 - 16 UNF	SAE 12 1-1/16 - 12 UNF
VD12A/DD/U4S	2 SECTIONS/DOUBLE ACTING				
VD12A/DDD/U4S	3 SECTIONS/DOUBLE ACTING				
VD12A/DDDD/U4S	4 SECTIONS/DOUBLE ACTING				
VD12A/DDDDD/U4S	5 SECTIONS/DOUBLE ACTING				
VD12A/DDDDDD/U4S	6 SECTIONS/DOUBLE ACTING				

OTHER SPOOLS AVAILABLE FROM STOCK

OPTIONS

PART NUMBER	DESCRIPTION
795429500	PLUG FOR CARRY OVER/POWER BEYOND
R22078390	PORT RELIEF VALVE (3060-5075) OTHER PRESSURES AVAILABLE
R22078360	PORT RELIEF +ANTICAVITATION VALVE (3060-4785) OTHER PRESSURES AVAILABLE
R22078440	ANTICAVITATION VALVE
R22400309	VD12A DETENT IN OUT KIT
R22176330	VD12A PNEUMATIC PROPORTIONAL KIT
R22475079	VD12A HYDRAULIC PROPORTIONAL KIT

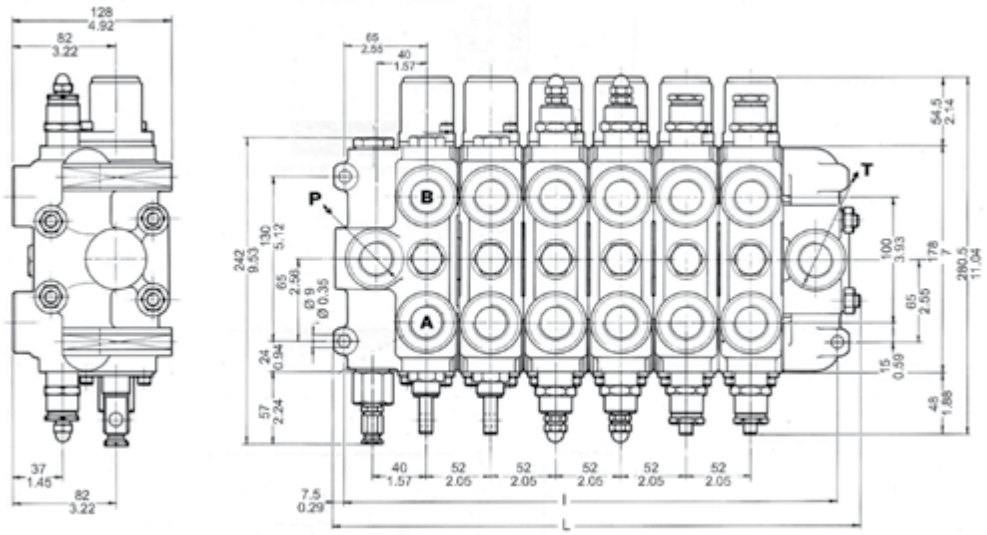

SN-3

NOMINAL FLOW RATE	13 GPM
OPERATING PRESSURE (MAXIMUM) PARALLE CIRCUIT	4600 PSI
BACK PRESSURE (MAXIMUM) ON OUTLET PORT T	360 PSI

SN-4

NOMINAL FLOW RATE	21 GPM
OPERATING PRESSURE (MAXIMUM) PARALLE CIRCUIT	4600 PSI
BACK PRESSURE (MAXIMUM) ON OUTLET PORT T	360 PSI

SN-5

NOMINAL FLOW RATE	32 GPM
OPERATING PRESSURE (MAXIMUM) PARALLE CIRCUIT	4600 PSI
BACK PRESSURE (MAXIMUM) ON OUTLET PORT T	360 PSI

SN-6

NOMINAL FLOW RATE	42 GPM
OPERATING PRESSURE (MAXIMUM) PARALLE CIRCUIT	4600 PSI
BACK PRESSURE (MAXIMUM) ON OUTLET PORT T	360 PSI

SN-8

NOMINAL FLOW RATE	63 GPM
OPERATING PRESSURE (MAXIMUM) PARALLE CIRCUIT	4600 PSI
BACK PRESSURE (MAXIMUM) ON OUTLET PORT T	360 PSI

PV4 VALVES

- LOAD SENSING PROPORTIONAL FOR FIXED AND VARIABLE DISPLACEMENT PUMPS
- FOR MOBILE & INDUSTRIAL APPLICATION
- FULLY CUSTOMIZED VALVE
- CHOICE OF SPOOLS ESPECIALLY DESIGNED FOR REQUEST FLOW
- LEVERS WITH INDIVIDUAL FLOW ADJUSTMENT SCREWS
- MANY CONTROLS AVAILBLE SUCH AS:
  - SINGLE MANUAL LEVERS
  - ELECTRONIC ON/OFF SIGNAL
  - PROPORTIONNAL ANALOG OR PWM SIGNAL
  - HYDRAULIC & CABLE CONTROLS
  - FRICTION DETENT
- SHOCK AND ANTI-CAVITATION VALVES AVAILABLE
- GREAT CHOICE OF DIFFERENT INLETS

PART NUMBER	NB OF SPOOL	GPM MAX	PSI MAX	PORTS
PV3 OR PV4 (CALL US FOR ASSISTANCE)	1 AND +	37	5075	P: SAE-08 & 10 A&B: SAE-10 T: SAE-12

PV3 VALVES

- SAME AS PV4 VALVES. MORE COMPACT SECTIONS

PVH-1 PROPORTIONAL CONTROL

- SINGLE LEVER FOR ONE SECTION OPERATION
- ESPECIALLY DESIGNED TO BE INSTALLED WITH PV4 & PV3 VALVES

INPUT RANGE	11-30VDC
CURRENT CONSUMPTION	100 mA
OUTPUT VOLTAGE	0.25 - 0.75 VDC
NEUTRAL VOLTAGE	0.5 VDC

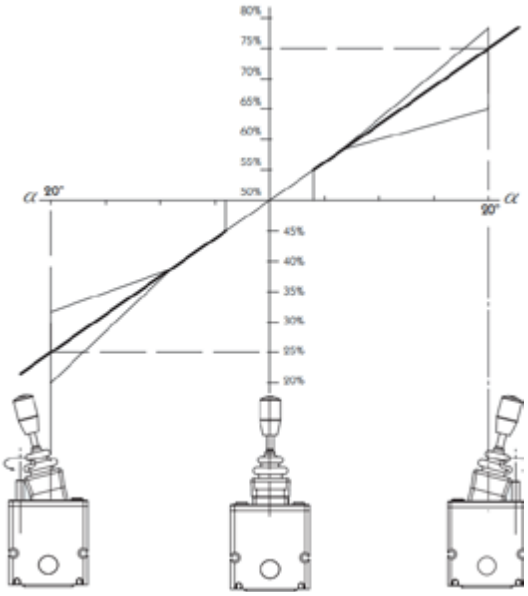

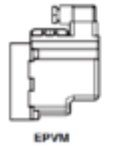

FITS "PVG32" DANFOSS FOOTPRINT

MAIN FEATURES
MAX. SETTING PRESSURE : 380 BAR
MAX. WORKING PRESSURE : 350 BAR
ELECTROYDRAULIC CONTROL
HYDRAULIC CONTROL
MANUAL CONTROL
UP-STREAM PRESSURE COMPENSATED

FITS "PVG16" DANFOSS FOOTPRINT

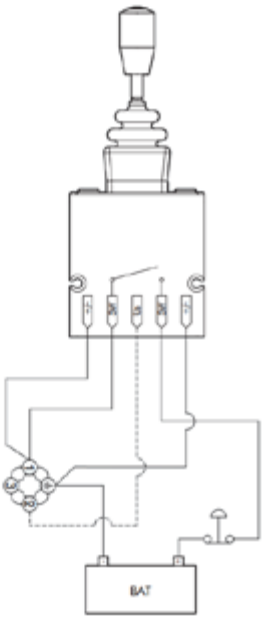

VDP08 LOAD SENSE VALVES

- FOR FIXED OR VARIABLE DISPLACEMENT PUMP
- MANY SPOOL CONTROLS AVAILABLE SUCH AS :
- MANUAL CONTROL
- PNEUMATIC OR HYDRAULIC CONTROL
- ELECTRICAL ON/OFF OR PROPORTIONAL

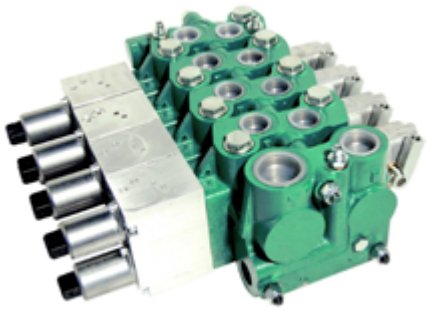

PART NUMBER	NB OF SPOOL	GPM MAX	PSI MAX	PORTS
VDP08 (CALL US FOR ASSISTANCE)	1 AND +	34 ON P PORT 25 ON A/B PORT	4500	P: SAE 12 A&B: SAE 10 T: SAE 16 LS: SAE 04

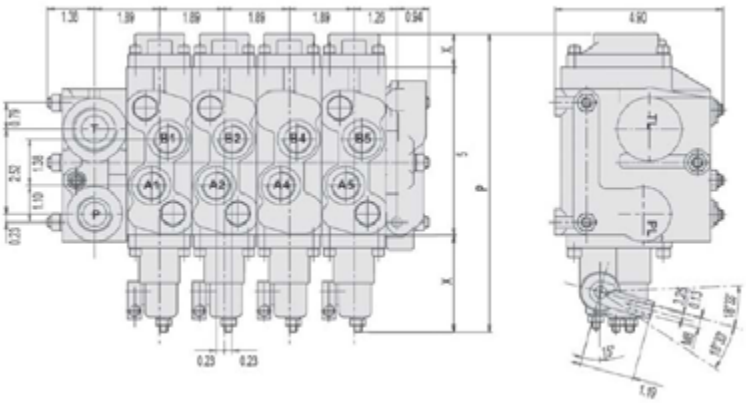

ELECTRONIC PROPORTIONAL PWM CONTROLLED

ELECTRIC SPECIFICATIONS

- SUPPLY VOLTAGE: 8-32 VDC
- CURRENT CONSUMPTION @ REST : 250 MA
- SENSOR HALL EFFECT CONTACTLESS TECHNOLOGY
- PWM OUTPUT : 2X DUAL PROPORTIONAL SOLENOID VALVES
- CURRENT OUTPUT RANGE (PWM) FROM 100 TO 1600 MA
- DITHER FREQUENCY : FROM 60 TO 250 HZ (100 HZ FACTORY PRESET)

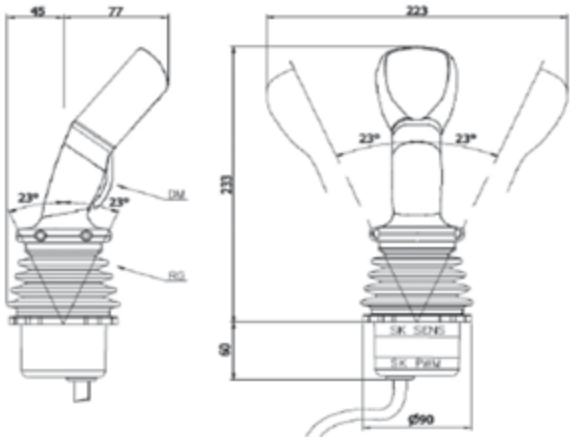

NEW OMFB PDV-74

PDV74 AND PDV74D ARE NEW BREAKTHROUGH PRODUCTS WITH UPGRADED HYDRAULIC FUNCTIONS THAT FULFILL THE EVER INCREASING MARKET DEMANDS FOR IMPROVED MACHINES PRODUCTIVITY, SAFETY, REQUIREMENTS, ENERGY EFFICIENT AND ENVIRONMENTAL OPERATION.

BASED ON LOAD SENSING TECHNOLOGY, THE ABILITY TO METER IN OUT ANY LOAD ACTUATORS PROVIDES A WIDE CHOICE OF CONTROL OPTIONS, AND ARE MEANT TO BE USED IN HAZARDOUS AREA.

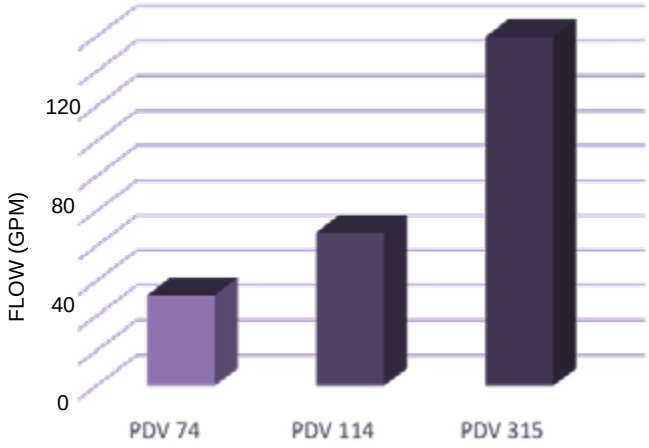

- MAX. SETTING PRESSURE : 5510 PSI
- MAX WORKING PRESSURE : 5075 PSI
- ELECTROYDRAULIC CONTROL
- HYDRAULIC CONTROL
- MANUAL CONTROL
- UP-STREAM PRESSURE COMPENSATED
- LOAD INDEPENDENT FLOW
- CAN BE OPERATES WITH BOTH FIXED AND VARIABLE DISPLACEMENT PUMPS
- HIGH POWER CAPABILITY CONTROL IN COMPACT DIMENSION
- HIGH REPEATABILITY FLOW ACCURACY
- FLEXIBLE HIGH-QUALITY PRODUCT

	FLOW RATE	GPM
PDV 74	PUMP SIDE INLET SECTION	42
	MID INLET SECTION	65
	WORKING SECTION	34

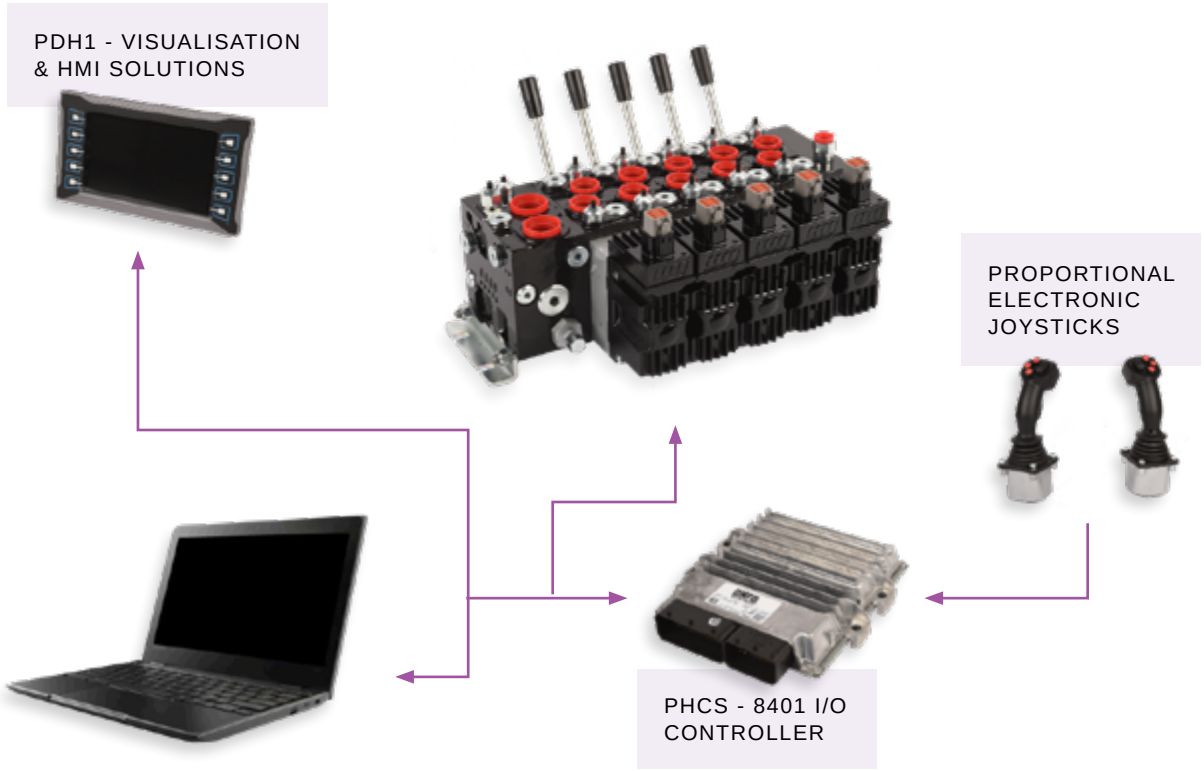

WIRELESS TRANSMITTER AND RECEIVER

REMOTE CONTROL SOLUTIONS FOR INDUSTRIES WHERE SAFETY AND RELIABILITY ARE CRUCIAL. THE OPERATOR CAN STAND ON THE SIDE AND CONTROL THE MACHINE FROM A SAFE DISTANCE. IDEAL FOR :

- LARGE CONSTRUCTION CRANES
- DRILLING RIGS
- CONCRETE PUMPS
- FORESTRY MACHINES
- TRUCK CRANES

MAXI TRANSMITTER

G4 RECEIVER

WIRELESS RECEPTOR OMFB

THE POWER-PRO WL CONTROL UNIT MANAGES

- ON / OFF BUTTON FOR START / STOP
- REMOTE CONTROL FOR RAISING AND LOWERING THE TIPPER BODY
- LIGHT SIGNALING ON TRANSMITTER OF THE BATTERY CHARGE CONDITION
- LUMINOUS SIGNALING ON TRANSMITTER OF THE BREAKER OF THE REMOTE CONTROL SWITCH
- LIGHT SIGNALING ON TRANSMITTER OF THE RAISED BUCKET
- BLOCKING OF FUNCTIONS BY THE SOS KEY

COMMUNICATION OF THE RADIO CONTROL TO THE UNIT

- ACTIVATION
- DUMP TRUCK
- TIP DOWN
- EMERGENCY STOP

COMMUNICATION OF THE UNIT RADIO CONTROL

- CONNECTION / COMMUNICATION CONDITIONS
- MOUNTED TIPER CONDITION
- LOCKED REMOTE SWITCH CONDITION
- EMERGENCY STOP CONDITION

PNEUMATIC CONTROLLER

AIR PROPORTIONAL CAB SWITCH WITH FULL INTEGRATED LEVER TO CONTROL BOTH PTO ENGAGEMENT AND TIP LIDTING/LOWERING. SEVERAL VERSIONS AVAILABLE TO MEET ANY REQUIREMENTS.

NEW FEATURE

LOCK SWITCH TO CONTROL THE PTO IT IS NECESSARY TO PUSH THE BLACK SWITCH AND THEN LIFT THE LEVER UP. THIS LOCK PREVENTS FROM ACCIDENTAL PTO ENGAGEMENT OPERATIONS.

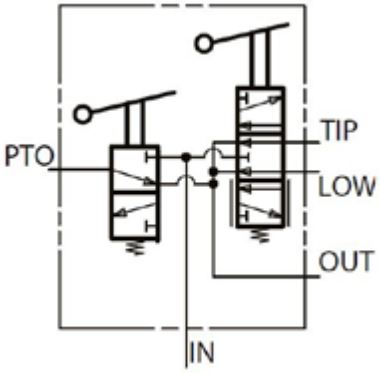

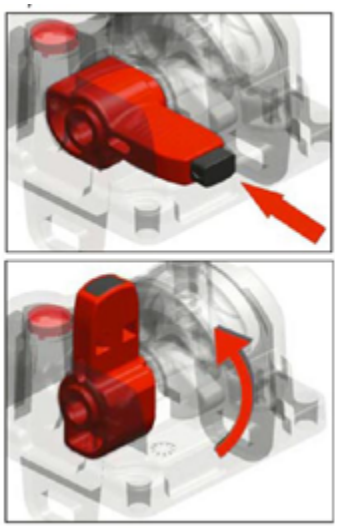

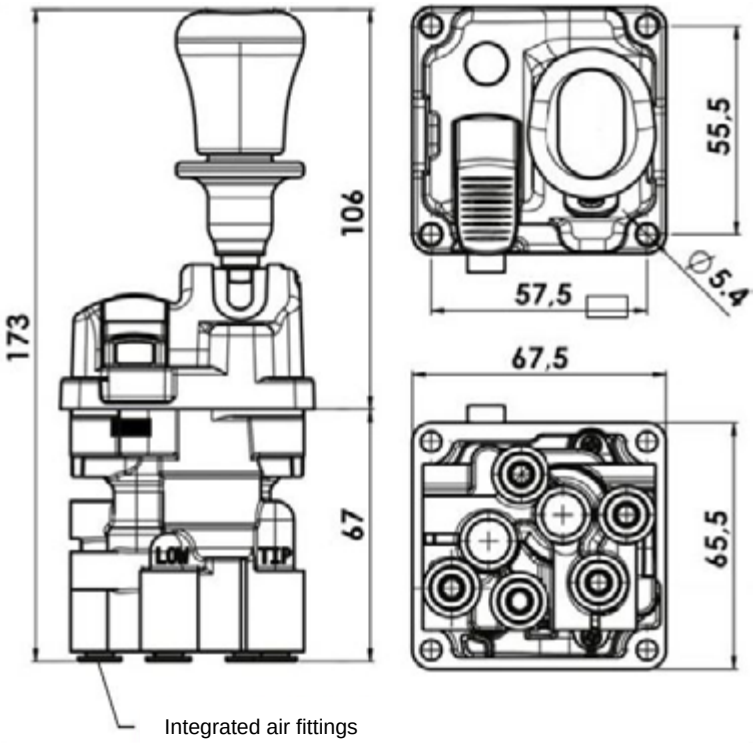

MADE TO FITS ON HYDRAULIC VALVES

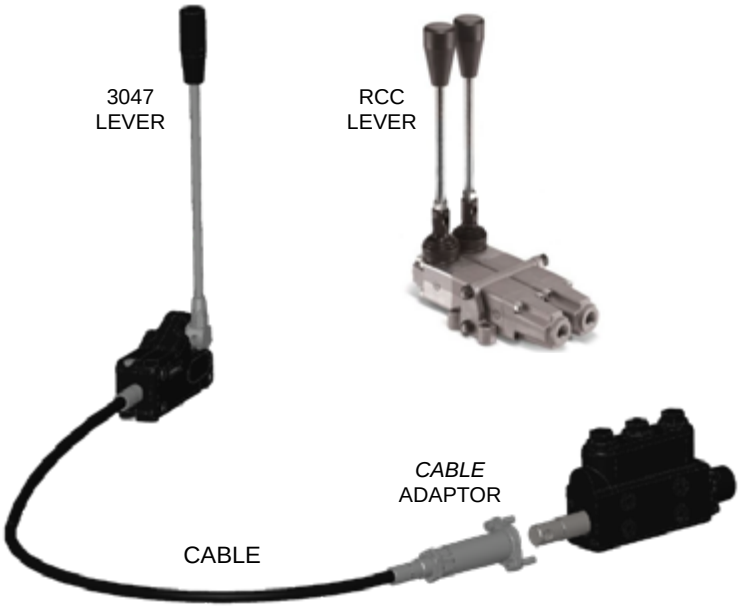

LEVER AND JOYSTICK

PART NUMBER	DESCRIPTION	FITS ON
3047	SINGLE AXIS LEVER	SALAMI, PRINCE
3336	DUAL AXIS JOYSTICK	
RCC3-1S-HL+GC	SINGLE AXIS LEVER MB2 TO MB4	YOULI, WALVOIL
RCC5-1S-HL+GC	SINGLE AXIS LEVER MB5	
FCR-2	DUAL AXIS JOYSTICK	

CABLE ADAPTOR FOR VALVES

PART NUMBER	VALVE MODELS	BRAND
R360T0200	VDM8, VD8A, VDM7	SALAMI
R360T0400	VDM9	
R360T0500	VD10A & VD12A	
R360T0600	VDM6, VD6A, VDM6A	
660170035	V20	PRINCE
660170037	RD500	
YLMB45003	MB2, MB3, MB4 & SD4, SD5	YOULI, WALVOIL
YLMB55003	MB5 & SD11	

LEVER VALVE

CABLE-XXXX TYPE

CABLES

PART NUMBER	LENGHT	BRAND
IT-3056/01.00	39.4 IN (1 M)	SALAMI, PRINCE
IT-3056/01.50	59.1 IN (1.5 M)	
IT-3056/02.00	78.7 IN (2 M)	
IT-3056/02.50	98.4 IN (2.5 M)	
IT-3056/03.00	118.1 IN (3 M)	
IT-3056/03.50	137.8 IN (3.5 M)	
IT-3056/04.00	157.5 IN (4 M)	
CABLE-1000	39.4 IN (1 M)	YOULI, WALVOIL
CABLE-1500	59.1 IN (1.5 M)	
CABLE-2000	78.7 IN (2 M)	

LEVER VALVE

IT-3056/CABLE TYPE

MORSE TYPE LEVERS

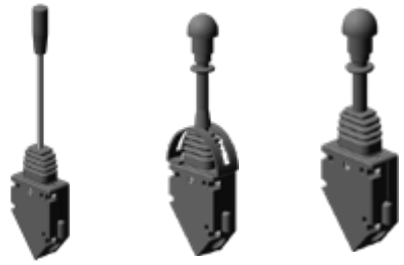

MORSE TYPE LEVERS

PART NUMBER	DESCRIPTION	TRAVEL
3430	SPRING RETURN	32 MM
3488	WITH DETENT	
3461	WITH CENTRAL LOCK KNOB	

CABLES

PART NUMBER	LENGHT	FITS ON
732491/01.00	39.4 IN (1 M)	MORSE TYPE LEVERS
732491/02.00	78.7 IN (2 M)	
732491/03.00	118.1 IN (3 M)	

LONG STROKE LEVERS

LONG STROKE LEVERS

PART NUMBER	DESCRIPTION	TRAVEL
3472	RACK GEAR	75 MM
3401	HAND THROTTLE	80 MM
3408	HAND THROTTLE WITH LEVER	

CABLES

PART NUMBER	LENGHT	FITS ON
741715/01.50	59.1 IN (1.5 M)	RACK GEARS
741715/02.00	78.7 IN (2 M)	
741715/03.00	118.1 IN (3 M)	
732882/01.00	39.4 IN (1 M)	HAND THROTTLE
732882/02.00	78.7 IN (2 M)	
732882/03.00	118.1 IN (3 M)	

PEDAL THROTTLE

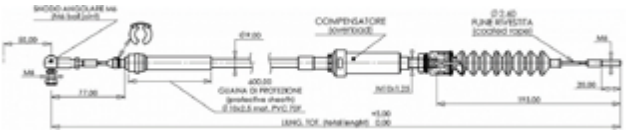

PEDAL THROTTLE

PART NUMBER	DESCRIPTION	TRAVEL
4021	BULKHEAD MOUNT WITH DETENT	28 MM
208991	FLOOR MOUNT, WITH LEVER	

CABLES

PART NUMBER	LENGHT	FITS ON
732491/01.00	39.4 IN (1 M)	BULKHEAD MOUNT PEDAL
732491/02.00	78.7 IN (2 M)	
732491/03.00	118.1 IN (3 M)	

ROCKER PEDALS

ROCKER PEDAL

PART NUMBER	DESCRIPTION	TRAVEL
631368	SINGLE ROCKER PEDAL	17 MM
631366	DOUBLE ROCKER PEDALS	14 MM

CABLES

PART NUMBER	LENGHT	FITS ON
731921/01.00	39.4 IN (1 M)	ROCKER PEDAL
731921/02.00	78.7 IN (2 M)	
731921/03.00	118.1 IN (3 M)	

CETOP D03 VALVES (ISO NG6)

- INTERCHANGEABLE WITH CETOP AND ISO VALVES ON THE MARKET
- BOLTKIT AND DIN CONNECTORS WITH LED INCLUDED
- CSA, UL AND CE PROOF
- OTHER SPOOL MODELS AND VOLTAGE AVAILAILBLE
- SOFTSHIFT VALVES AVAILABLE

DIN CONN

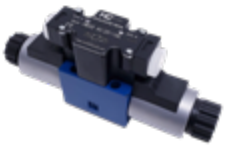

TERMINAL BOX

MAXIMUM PRESSURE: 4560 PSI
MAXIMUM BACK PRESSURE: 2320 PSI

HYDRO CUSTOM PART NUMBER	VOLTAGE	MAX GPM @3600 PSI	SPOOL MODEL	MAX GPM @3600 PSI	VOLTAGE	YUKEN PART NO
4WE6-D-6X/ED12-LL	12V DC DIN	18		21	12V DC DIN	DSG01-2B2-D12N
4WE6-D-6X/ED12-BL	12V DC BOX				12V DC BOX	DSG01-2B2-D12
4WE6-D-6X/ED24-LL	24V DC DIN				24V DC DIN	DSG01-2B2-D24N
4WE6-D-6X/ED24-BL	24V DC BOX				24V DC BOX	DSG01-2B2-D24N
4WE6-D-6X/ER110-LL	120V AC DIN				120V AC DIN	DSG01-2B2-A120N
4WE6-D-6X/ER110-BL	120 V AC BOX				120 V AC BOX	DSG01-2B2-A120
4WE6-E-6X/ED12-LL	12V DC DIN	21		26	12V DC DIN	DSG01-3C2-D12N
4WE6-E-6X/ED12-BL	12V DC BOX				12V DC BOX	DSG01-3C2-D12
4WE6-E-6X/ED24-LL	24V DC DIN				24V DC DIN	DSG01-3C2-D24N
4WE6-E-6X/ED24-BL	24V DC BOX				24V DC BOX	DSG01-3C2-D24N
4WE6-E-6X/ER110-LL	120V AC DIN				120V AC DIN	DSG01-3C2-A120N
4WE6-E-6X/ER110-BL	120 V AC BOX				120 V AC BOX	DSG01-3C2-A120
4WE6-H-6X/ED12-LL	12V DC DIN	13		24	12V DC DIN	DSG01-3C3-D12N
4WE6-H-6X/ED12-BL	12V DC BOX				12V DC BOX	DSG01-3C3-D12
4WE6-H-6X/ED24-LL	24V DC DIN				24V DC DIN	DSG01-3C3-D24N
4WE6-H-6X/ED24-BL	24V DC BOX				24V DC BOX	DSG01-3C3-D24N
4WE6-H-6X/ER110-LL	120V AC DIN				120V AC DIN	DSG01-3C3-A120N
4WE6-H-6X/ER110-BL	120 V AC BOX				120 V AC BOX	DSG01-3C3-A120
4WE6-J-6X/ED12-LL	12V DC DIN	21		24	12V DC DIN	DSG01-3C4-D12N
4WE6-J-6X/ED12-BL	12V DC BOX				12V DC BOX	DSG01-3C4-D12
4WE6-J-6X/ED24-LL	24V DC DIN				24V DC DIN	DSG01-3C4-D24N
4WE6-J-6X/ED24-BL	24V DC BOX				24V DC BOX	DSG01-3C4-D24N
4WE6-J-6X/ER110-LL	120V AC DIN				120V AC DIN	DSG01-3C4-A120N
4WE6-J-6X/ER110-BL	120 V AC BOX				120 V AC BOX	DSG01-3C4-A120
4WE6-G-6X/ER12-LL	12V DC DIN	13		10	12V DC DIN	DSG01-3C60-D12N
4WE6-G-6X/ER12-BL	12V DC BOX				12V DC BOX	DSG01-3C60-D12
4WE6-G-6X/ER24-LL	24V DC DIN				24V DC DIN	DSG01-3C60-D24N
4WE6-G-6X/ER24-BL	24V DC BOX				24V DC BOX	DSG01-3C60-D24N
4WE6-G-6X/ER110-LL	120V AC DIN				120V AC DIN	DSG01-3C60-A120N
4WE6-G-6X/ER110-BL	120 V AC BOX				120 V AC BOX	DSG01-3C60-A120

SUBPLATES

- 10-24 UNC THREADS

PART NUMBER	DESCRIPTION
SPA03-BP-S08	ALU, 3000 PSI, SAE-08, BOTTOM PORTS
SPA03-SB-S08	ALU, 3000 PSI, ALL PORTS ON SIDE. P & T ALSO ON BOTTOM
SPA03-SB-S08-C10-2	SAME AS SPA03-SB-S08 PLUS C10-2 RELIEF CAVITY
DSGM01-X-3090	CAST IRON, 5000 PSI, 1/4 NPT BOTTOM PORTS
DSGM01-Y-3090	CAST IRON, 5000 PSI, 3/8 NPT BOTTOM PORTS

COVER PLATES

- 3000 PSI, ALUMINUM MADE
- BOLT KIT INCLUDED

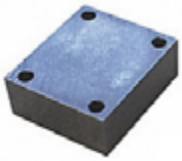

PART NUMBER	DESCRIPTION
CPA03-XX	ALL PORTS BLOCKED
CPA03-PT	OIL PASSAGE FROM P TO T

CETOP D05 VALVES (ISO NG10)

- INTERCHANGEABLE WITH CETOP AND ISO VALVES ON THE MARKET
- BOLTKIT AND DIN CONNECTORS WITH LED INCLUDED
- CSA, UL AND CE PROOF
- OTHER SPOOL MODELS AND VOLTAGE AVAILAILBLE
- SOFTSHIFT VALVES AVAILABLE

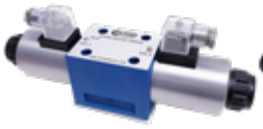

DIN CONN

TERMINAL BOX

MAXIMUM PRESSURE: 4560 PSI
MAXIMUM BACK PRESSURE: 2320 PSI

HYDRO CUSTOM PART NUMBER	VOLTAGE	MAX GPM @3600 PSI	SPOOL MODEL	MAX GPM @3600 PSI	VOLTAGE	YUKEN PART NO
4WE10-D-3X/CD12-LL	12V DC DIN	26		32	12V DC DIN	DSG03-2B2-D12N
4WE10-D-3X/CD12-BL	12V DC BOX				12V DC BOX	DSG03-2B2-D12
4WE10-D-3X/CD24-LL	24V DC DIN				24V DC DIN	DSG03-2B2-D24N
4WE10-D-3X/CD24-BL	24V DC BOX				24V DC BOX	DSG03-2B2-D24N
4WE10-D-3X/CR110-LL	120V AC DIN				120V AC DIN	DSG03-2B2-A120N
4WE10-D-3X/CR110-BL	120 V AC BOX				120 V AC BOX	DSG03-2B2-A120
4WE10-E-3X/CD12-LL	12V DC DIN	32		26	12V DC DIN	DSG03-3C2-D12N
4WE10-E-3X/CD12-BL	12V DC BOX				12V DC BOX	DSG03-3C2-D12
4WE10-E-3X/CD24-LL	24V DC DIN				24V DC DIN	DSG03-3C2-D24N
4WE10-E-3X/CD24-BL	24V DC BOX				24V DC BOX	DSG03-3C2-D24N
4WE10-E-3X/CR110-LL	120V AC DIN				120V AC DIN	DSG03-3C2-A120N
4WE10-E-3X/CR110-BL	120 V AC BOX				120 V AC BOX	DSG03-3C2-A120
4WE10-H-3X/CD12-LL	12V DC DIN	26		24	12V DC DIN	DSG03-3C3-D12N
4WE10-H-3X/CD12-BL	12V DC BOX				12V DC BOX	DSG03-3C3-D12
4WE10-H-3X/CD24-LL	24V DC DIN				24V DC DIN	DSG03-3C3-D24N
4WE10-H-3X/CD24-BL	24V DC BOX				24V DC BOX	DSG03-3C3-D24N
4WE10-H-3X/CR110-LL	120V AC DIN				120V AC DIN	DSG03-3C3-A120N
4WE10-H-3X/CR110-BL	120 V AC BOX				120 V AC BOX	DSG03-3C3-A120
4WE10-J-3X/CD12-LL	12V DC DIN	32		24	12V DC DIN	DSG03-3C4-D12N
4WE10-J-3X/CD12-BL	12V DC BOX				12V DC BOX	DSG03-3C4-D12
4WE10-J-3X/CD24-LL	24V DC DIN				24V DC DIN	DSG03-3C4-D24N
4WE10-J-3X/CD24-BL	24V DC BOX				24V DC BOX	DSG03-3C4-D24N
4WE10-J-3X/CR110-LL	120V AC DIN				120V AC DIN	DSG03-3C4-A120N
4WE10-J-3X/CR110-BL	120 V AC BOX				120 V AC BOX	DSG03-3C4-A120
4WE10-G-3X/CD12-LL	12V DC DIN	21		18	12V DC DIN	DSG03-3C60-D12N
4WE10-G-3X/CD12-BL	12V DC BOX				12V DC BOX	DSG03-3C60-D12
4WE10-G-3X/CD24-LL	24V DC DIN				24V DC DIN	DSG03-3C60-D24N
4WE10-G-3X/CD24-BL	24V DC BOX				24V DC BOX	DSG03-3C60-D24N
4WE10-G-3X/CR110-LL	120V AC DIN				120V AC DIN	DSG03-3C60-A120N
4WE10-G-3X/CR110-BL	120 V AC BOX				120 V AC BOX	DSG03-3C60-A120

SUBPLATES

- 1/4-20 UNC THREADS

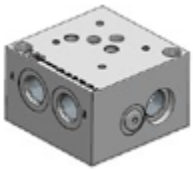

PART NUMBER	DESCRIPTION
SPA05-SP-S10	ALU, 3000 PSI, SAE-10, SIDE PORTS
SPA05-SB-S10-C10-2	ALU, 3000 PSI, SIDE PORTS. P & T ALSO ON BOTTOM, SAE-10 C10-2 RELIEF CAVITY
DSGM03-X-2190	CAST IRON, 5000 PSI, 1/2 NPT, BOTTOM PORTS
DSGM03-Y-2190	CAST IRON, 5000 PSI, 3/4 NPT, BOTTOM PORTS

COVER PLATES

- 3000 PSI, ALUMINUM MADE
- BOLT KIT INCLUDED

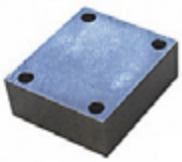

PART NUMBER	DESCRIPTION
CPA05-XX	ALL PORTS BLOCKED
CPA05-PT	OIL PASSAGE FROM P TO T

CETOP D07 VALVES (ISO NG16)

- INTERCHANGEABLE WITH CETOP AND ISO VALVES ON THE MARKET
- BOLTKIT AND DIN CONNECTORS WITH LED INCLUDED
- CSA, UL AND CE PROOF
- OTHER SPOOL MODELS AND VOLTAGE AVAILAILBLE
- INTERNAL PILOT, EXTERNAL DRAIN SETUP. EASY TO MODIFY

MAXIMUM PRESSURE: 4560 PSI
MAXIMUM BACK PRESSURE: 2320 PSI

HYDRO CUSTOM PART NUMBER	VOLTAGE	MAX GPM @3600 PSI	SPOOL MODEL	MAX GPM @3600 PSI	VOLTAGE	PART NO
4WEH16-D-D12-E-LL	12V DC DIN	66		79	12V DC DIN	DSHG04-2B2-D12N
4WEH16-D-D12-E-BL	12V DC BOX				12V DC BOX	DSHG04-2B2-D12
4WEH16-D-D24-E-LL	24V DC DIN				24V DC DIN	DSHG04 -2B2-D24N
4WEH16-D-D24-E-BL	24V DC BOX				24V DC BOX	DSHG04-2B2-D24N
4WEH16-D-R110-E-LL	120V AC DIN				120V AC DIN	DSHG04-2B2-A120N
4WEH16-D-R110-E-BL	120 V AC BOX				120 V AC BOX	DSHG04-2B2-A120
4WEH16-E-D12-E-LL	12V DC DIN	66		53	12V DC DIN	DSHG04-3C2-D12N
4WEH16-E-D12-E-BL	12V DC BOX				12V DC BOX	DSHG04-3C2-D12
4WEH16-E-D24-E-LL	24V DC DIN				24V DC DIN	DSHG04-3C2-D24N
4WEH16-E-D24-E-BL	24V DC BOX				24V DC BOX	DSHG04-3C2-D24N
4WEH16-E-R110-E-LL	120V AC DIN				120V AC DIN	DSHG04-3C2-A120N
4WEH16-E-R110-E-BL	120 V AC BOX				120 V AC BOX	DSHG04-3C2-A120
4WEH16-H-D12-E-LL	12V DC DIN	79		79	12V DC DIN	DSHG04-3C3-D12N
4WEH16-H-D12-E-BL	12V DC BOX				12V DC BOX	DSHG04-3C3-D12
4WEH16-H-D24-E-LL	24V DC DIN				24V DC DIN	DSHG04-3C3-D24N
4WEH16-H-D24-E-BL	24V DC BOX				24V DC BOX	DSHG04-3C3-D24N
4WEH16-H-R110-E-LL	120V AC DIN				120V AC DIN	DSHG04-3C3-A120N
4WEH16-H-R110-E-BL	120 V AC BOX				120 V AC BOX	DSHG04-3C3-A120
4WEH16-J-D12-E-LL	12V DC DIN	79		66	12V DC DIN	DSHG04-3C4-D12N
4WEH16-J-D12-E-BL	12V DC BOX				12V DC BOX	DSHG04-3C4-D12
4WEH16-J-D24-E-LL	24V DC DIN				24V DC DIN	DSHG04-3C4-D24N
4WEH16-J-D24-E-BL	24V DC BOX				24V DC BOX	DSHG04-3C4-D24N
4WEH16-J-R110-E-LL	120V AC DIN				120V AC DIN	DSHG04-3C4-A120N
4WEH16-J-R110-E-BL	120 V AC BOX				120 V AC BOX	DSHG04-3C4-A120
4WEH16-G-D12-E-LL	12V DC DIN	66		79	12V DC DIN	DSHG04-3C60-D12N
4WEH16-G-D12-E-BL	12V DC BOX				12V DC BOX	DSHG04-3C60-D12
4WEH16-G-D24-E-LL	24V DC DIN				24V DC DIN	DSHG04-3C60-D24N
4WEH16-G-D24-E-BL	24V DC BOX				24V DC BOX	DSHG04-3C60-D24N
4WEH16-G-R110-E-LL	120V AC DIN				120V AC DIN	DSHG04-3C60-A120N
4WEH16-G-R110-E-BL	120 V AC BOX				120 V AC BOX	DSHG04-3C60-A120

SUBPLATES

- IMPERIAL THREADS

PART NUMBER	DESCRIPTION
SPA07-SP-S16	ALU, 3000 PSI, SAE-16, SIDE PORTS
DHGM-04X-2090	CAST IRON, 5000 PSI, 3/4 NPT, BOTTOM PORTS

CETOP D08 VALVES (ISO NG25)

- INTERCHANGEABLE WITH CETOP AND ISO VALVES ON THE MARKET
- BOLTKIT AND DIN CONNECTORS WITH LED INCLUDED
- CSA, UL AND CE PROOF
- OTHER SPOOL MODELS AND VOLTAGE AVAILAILBLE
- INTERNAL PILOT, EXTERNAL DRAIN SETUP. EASY TO MODIFY

MAXIMUM PRESSURE: 5075 PSI
MAXIMUM BACK PRESSURE: 2320 PSI

HYDRO CUSTOM PART NUMBER	VOLTAGE	MAX GPM @3600 PSI	SPOOL MODEL	MAX GPM @3600 PSI	VOLTAGE	PART NO
4WEH25-D-D12-E-LL	12V DC DIN	172		132	12V DC DIN	DSHG06-2B2-D12N
4WEH25-D-D12-E-BL	12V DC BOX				12V DC BOX	DSHG06-2B2-D12
4WEH25-D-D24-E-LL	24V DC DIN				24V DC DIN	DSHG06-2B2-D24N
4WEH25-D-D24-E-BL	24V DC BOX				24V DC BOX	DSHG06-2B2-D24N
4WEH25-D-R110-E-LL	120V AC DIN				120V AC DIN	DSHG06-2B2-A120N
4WEH25-D-R110-E-BL	120 V AC BOX				120 V AC BOX	DSHG06-2B2-A120
4WEH25-E-D12-E-LL	12V DC DIN	172		132	12V DC DIN	DSHG06-3C2-D12N
4WEH25-E-D12-E-BL	12V DC BOX				12V DC BOX	DSHG06-3C2-D12
4WEH25-E-D24-E-LL	24V DC DIN				24V DC DIN	DSHG06-3C2-D24N
4WEH25-E-D24-E-BL	24V DC BOX				24V DC BOX	DSHG06-3C2-D24N
4WEH25-E-R110-E-LL	120V AC DIN				120V AC DIN	DSHG06-3C2-A120N
4WEH25-E-R110-E-BL	120 V AC BOX				120 V AC BOX	DSHG06-3C2-A120
4WEH25-H-D12-E-LL	12V DC DIN	172		122	12V DC DIN	DSHG06-3C3-D12N
4WEH25-H-D12-E-BL	12V DC BOX				12V DC BOX	DSHG06-3C3-D12
4WEH25-H-D24-E-LL	24V DC DIN				24V DC DIN	DSHG06-3C3-D24N
4WEH25-H-D24-E-BL	24V DC BOX				24V DC BOX	DSHG06-3C3-D24N
4WEH25-H-R110-E-LL	120V AC DIN				120V AC DIN	DSHG06-3C3-A120N
4WEH25-H-R110-E-BL	120 V AC BOX				120 V AC BOX	DSHG06-3C3-A120
4WEH25-J-D12-E-LL	12V DC DIN	164		132	12V DC DIN	DSHG06-3C4-D12N
4WEH25-J-D12-E-BL	12V DC BOX				12V DC BOX	DSHG06-3C4-D12
4WEH25-J-D24-E-LL	24V DC DIN				24V DC DIN	DSHG06-3C4-D24N
4WEH25-J-D24-E-BL	24V DC BOX				24V DC BOX	DSHG06-3C4-D24N
4WEH25-J-R110-E-LL	120V AC DIN				120V AC DIN	DSHG06-3C4-A120N
4WEH25-J-R110-E-BL	120 V AC BOX				120 V AC BOX	DSHG06-3C4-A120
4WEH25-G-D12-E-LL	12V DC DIN	172		90	12V DC DIN	DSHG06-3C60-D12N
4WEH25-G-D12-E-BL	12V DC BOX				12V DC BOX	DSHG06-3C60-D12
4WEH25-G-D24-E-LL	24V DC DIN				24V DC DIN	DSHG06-3C60-D24N
4WEH25-G-D24-E-BL	24V DC BOX				24V DC BOX	DSHG06-3C60-D24N
4WEH25-G-R110-E-LL	120V AC DIN				120V AC DIN	DSHG06-3C60-A120N
4WEH25-G-R110-E-BL	120 V AC BOX				120 V AC BOX	DSHG06-3C60-A120

SUBPLATES

- IMPERIAL THREADS

PART NUMBER	DESCRIPTION
SPA08-SP-S20	ALUMINIUM, 3000 PSI, SAE-20, SIDE PORTS
DHGM-06-5090	CAST IRON, 5000 PSI, 3/4 NPT, BOTTOM PORTS
DHGM-06X-5090	CAST IRON, 5000 PSI, 1 NPT, BOTTOM PORTS

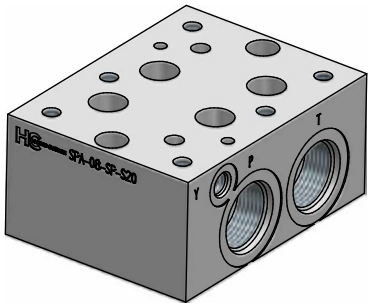

MODULAR VALVES

- COMPACT DESIGN
- MULTIPLE CIRCUITS
- STACKABLE
- AVAILABLE IN ALUMINUM OR STEEL
- LESS OVERCROWDING HOSE AND FITTING LOWERING THE AMOUNT OF LEAK POINT

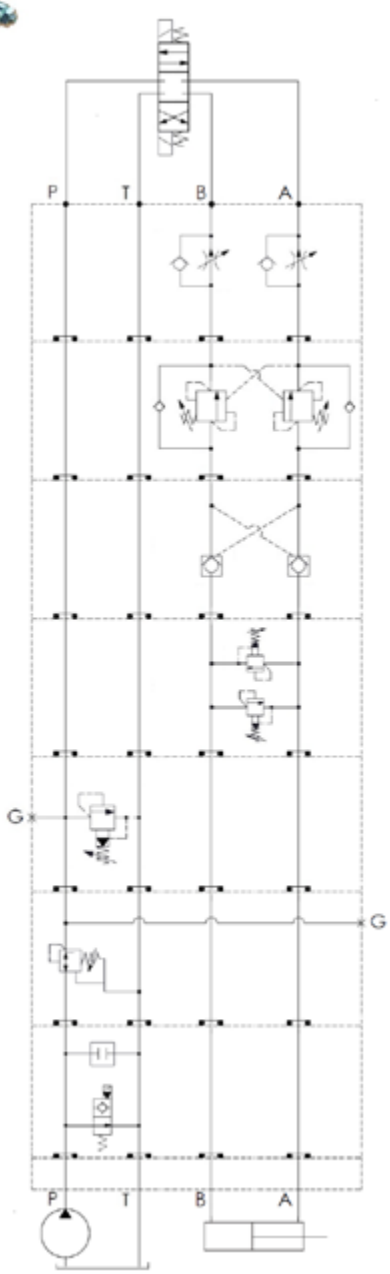

FUNCTION	PART NUMBER	CETOP	MAX GPM	HEIGHT	PSI RANGE
FLOW CONTROL METER "OUT"	MH03FDO-FR0A-FR0A-A01	D03	10.5	1.75	N/A
	MH05FDO-5A2-5A2-A01	D05	21	1.95	
COUNTERBALANCE VALVE (PILOT RATIO 3:1)	MH03CDW-CB3H-CB3H-A02	D03	10.5	1.75	1000 - 4000
	MH05CDW-CB3H-CB3H-A01	D05	21	1.95	2000 - 5000
LOCK VALVE (PILOT RATIO 3:1)	MH03CDW-CO20-CO20-A02	D03	10.5	1.75	N/A
	MH05CDW-CO20-CO20-A01	D05	21	1.95	
CROSS-OVER RELIEF (A - B)	MH03RDH-RP0A-RP0A-A01	D03	10.5	1.75	100 - 3000
	MH05RDH-RP0A-RP0A-A01	D05	21	1.95	
PRESSURE RELIEF P TO T PORT	MH03RPH-10A2-N02-A01	D03	10.5	1.75	100 - 3000
	MH05RPH-RD5A-N02-A01	D05	21	1.95	
PRESSURE REDUCING ON "P" PORT	MHP03PPW-PD0A-A02	D03	10.5	1.75	100 - 3000
	MHP05PPW-PD0A-A01	D05	21	1.95	
DERIVATIVE CIRCUIT	MH03RPJ-10A2-EP02*	D03	10.5	1.75	N/A
	MH05RPD-CP00-EP02*	D05	21	1.95	

* COIL MUST BE ORDERED SEPARATELY. USES EC04W ON PAGE

BOLT KITS

	PART NUMBER	LENGTH
CETOP D03	MBK01-325	1.57" + DIR. VLV.
	MBK01-350	1.75" + DIR. VLV.
	MBK01-490	1.57" + 1.57" + DIR. VLV.
	MBK01-500	1.57" + 1.75" + DIR. VLV.
	MBK01-525	1.75" + 1.75" + DIR. VLV.

	PART NUMBER	LENGTH
CETOP D05	MBK03-350	1.95" + DIR. VLV
	MBK03-550	1.95" + 1.95" + DIR. VLV

- MADE OF ALUMINUM
- 3500 PSI MAXIMUM PRESSURE
- INCLUDES MOUNTING KIT
- C10-2 CAVITY FOR RELIEF
- SAE-06 PRESSURE GAUGE PORT

OPTIONS

- NPT THREADS
- STEEL
- NUMBER OF STATIONS
- TYPE OF CAVITY FOR RELIEF

CETOP D03 / ISO 06 MANIFOLDS

SERIES CIRCUIT

PART NUMBER	NUMBER OF STATIONS	PORTS		"L"
		P & T	A & B	DIM
BMA03 S02 S08 C10-2	2	SAE 10	SAE 08	4.25
BMA03 S03 S08 C10-2	3			6.37
BMA03 S04 S08 C10-2	4			8.50
BMA03 S05 S08 C10-2	5			10.62
BMA03 S06 S08 C10-2	6			12.75

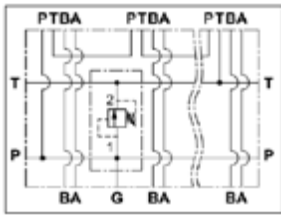

SERIES CIRCUIT WITH OPTIONAL RELIEF VALVE SHOWN

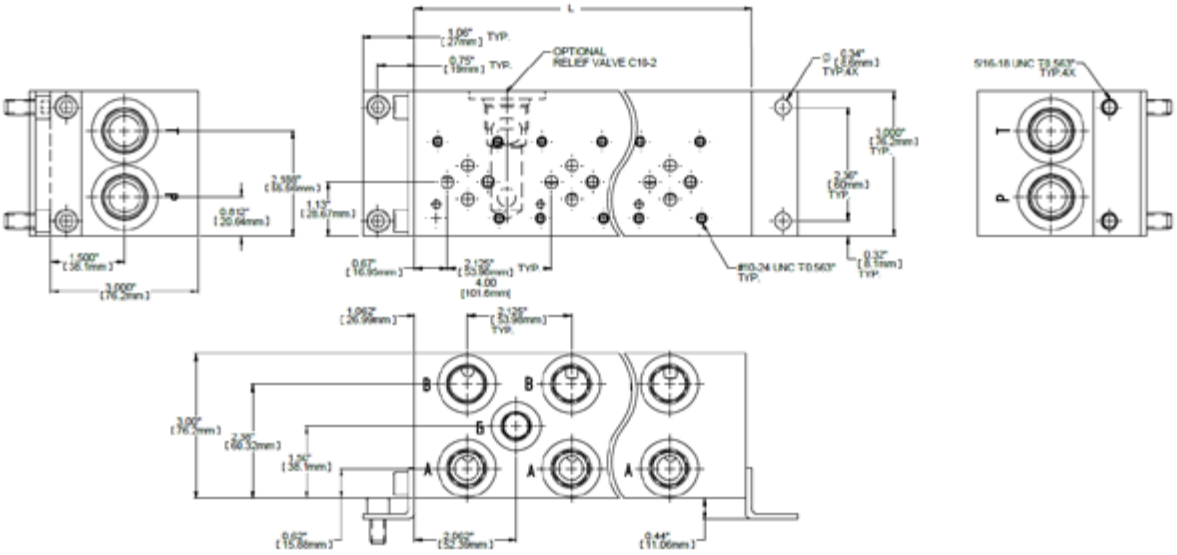
L
OPTIONAL RELIEF VALVE C10-2
TYP.
TYP.
TYP.

CETOP D05 / ISO 10 MANIFOLDS

- SERIES CIRCUIT

PART NUMBER	NUMBER OF STATIONS	PORTS		"L" DIM
		P & T	A & B	
BMA05 S02 S10 C10-2	2	SAE-12	SAE-10	6.75
BMA05 S03 S10 C10-2	3			9.75
BMA05 S04 S10 C10-2	4			13.00
BMA05 S05 S10 C10-2	5			16.25
BMA05 S06 S10 C10-2	6			19.5

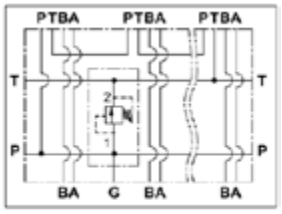

SERIES CIRCUIT WITH
OPTIONAL RELIEF VALVE SHOWN

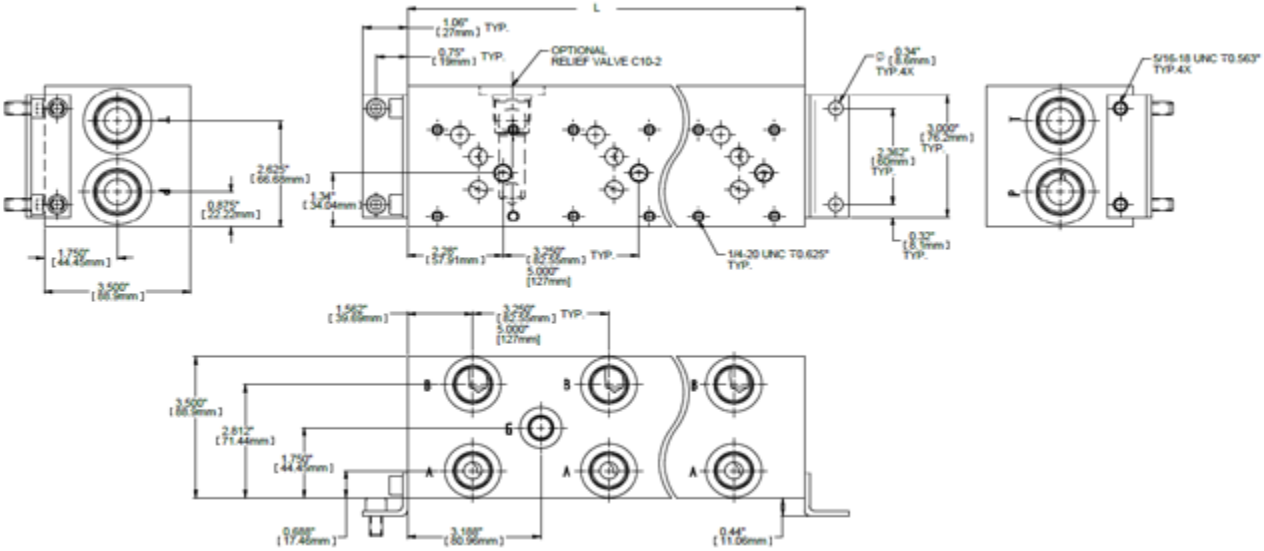

PARALLEL CIRCUIT

PART NUMBER	NUMBER OF STATIONS	PORTS		"L" DIM
		P & T	A & B	
BMA05 P02 S10 C10-2	2	SAE-12	SAE-10	6.50
BMA05 P03 S10 C10-2	3			9.75
BMA05 P04 S10 C10-2	4			13.00
BMA05 P05 S10 C10-2	5			16.25
BMA05 P06 S10 C10-2	6			19.5

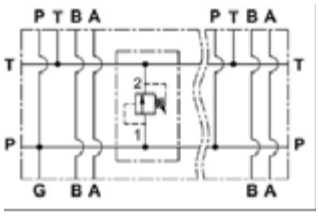

PARALLEL CIRCUIT WITH
OPTIONAL RELIEF VALVE SHOWN

RELIEF & CAVITY PLUG

PART NUMBER	DESCRIPTION
DE-RVP-00-4000	RELIEF 1000-4000 PSI
CAV-PLUG-10-2	CAVITY PLUG

GENERAL SPECIFICATIONS

FEATURES AND BENEFITS

- HYDRAULIC CIRCUIT AND BLOCKS DESIGNED IN NORTH AMERICA
- ONE MANUFACTURE IN NORTH AMERICA
- SUN AND COMMON CAVITIES (OTHER ON REQUEST)
- POSSIBLE TO INTEGRATE CETOP AND SECTIONAL VALVES

FLOW REGULATOR FOR AUXILIARY CIRCUIT

CUSTOMIZED INTEGRATED PRODUCT

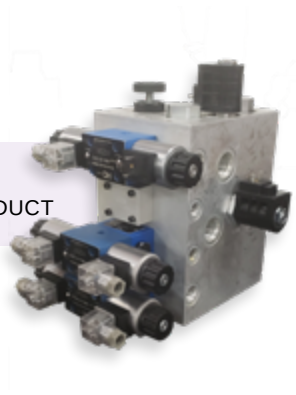

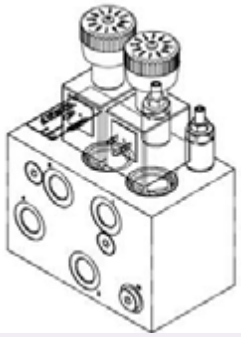

SALT SPRAYER VALVES

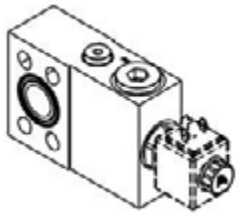

EXCAVATOR VALVES

AUXILIAIRY QUICK HITCH

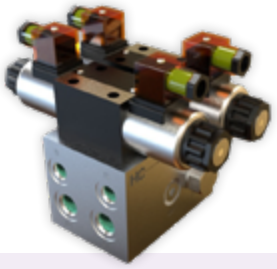

CUSTOMIZED INTEGRATED PRODUCT

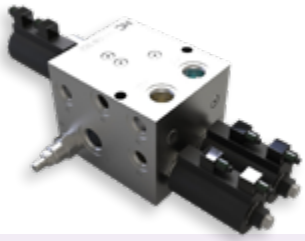

CUSTOMIZED INTEGRATED PRODUCT

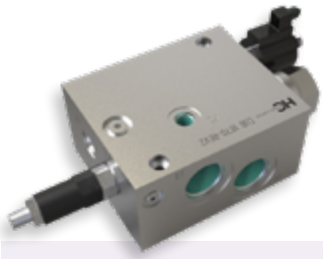

REGENERATION BLOC

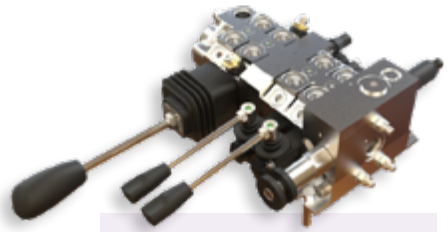

CUSTOMIZED INTEGRATED PRODUCT

PRESSURE REDUCING BLOCK

STREET BRUSH BLOCK

2 WAY, 2 POSITIONS, NORMALLY CLOSE

PART NUMBER	MAX GPM	MAX PSI	CAVITY	COIL	CIRCUIT
PB-S2B-00	8	3500	C8-2	P	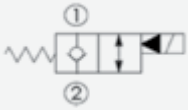
EP08W2A05M05	10	5000		EC04W	
DE-S2B-00	15	3500	C10-2	D	
EP10W2A05M05	17.5	5000		EC04W	
TT-S2B-00	25	3000	C12-2	D	
EP12W2A05M05	37.5	5000		EC04W	
SJ-S2B-00	30	3500	C16-2	D	
EP16W2A05M05	37.5	5000		EC04W	
DE-S2I-00	4	3000	C10-2	D	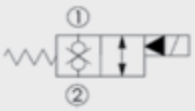
EP08W2A31M05	10	5000	C8-2	EC04W	
EP10W2A31M05	17.5	5000	C10-2		
EP16W2A31M05	37.5	5000	C16-2		

2 WAY, 2 POSITIONS, NORMALLY OPEN

PART NUMBER	MAX GPM	MAX PSI	CAVITY	COIL	CIRCUIT
PB-S2D-00	10	3500	C8-2	P	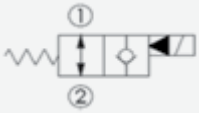
EP08W2A06M05	10	5000		EC04W	
DE-S2D-00	15	3500	C10-2	D	
EP10W2A06M05	17.5	5000		EC04W	
TT-S2D-00	30	3000	C12-2	D	
EP12W2A06M05	37.5	5000		EC04W	
SJ-S2D-00	40	3000	C16-2	D	
EP16W2A06M05	37.5	5000		EC04W	
EP08W2A32M05	10	5000	C8-2	EC04W	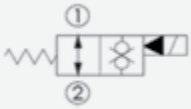
EP10W2A32M05	17.5	5000	C10-2		
EP16W2A31M05	37.5	5000	C16-2		

3 WAY, 2 POSITIONS

PART NUMBER	MAX GPM	MAX PSI	CAVITY	COIL	CIRCUIT
ES08W3A11N04	2.5	3000	C8-3	EC04W	
DF-S3A-00	10	3000	C10-3	D	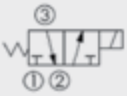
TYPICALLY USED FOR SINGLE ACTING CYLINDER					
DF-S3B-00	8	3000	C10-3	D	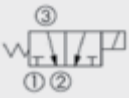
TYPICALLY USED AS A SELECTOR					

4 WAY, 2 POSITIONS

PART NUMBER	MAX GPM	MAX PSI	CAVITY	COIL	CIRCUIT
ES08W4A10N04	3	3000	C8-4	EC04W	
DG-S4A-00	10		C10-4	D	
ES08W4A11N04	4	3000	C8-4	EC04W	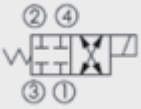
DG-S4B-00	10		C10-4	D	

BODIES

- MADE IN ALUMINUM
- 3000 PSI MAXIMUM PRESSURE

PART NUMBER	CAVITY	PORTS	DIMENSIONS					
			A	B	C	D	E	F
30102466	C8-2	SAE 06	2.0	2.0	1.25	1.50	1.50	1.50
30102359	C10-2	SAE 08	2.12	2.0	1.50	1.75	0.50	0.28
30102364		SAE 06						
30102813	C12-2	SAE 12	3.09	2.75	1.75	2.2	0.84	0.41
30102331	C16-2	SAE 12	3.0	3.0	2.0	2.44	0.75	
30102533	C8-3	SAE 06	2.5	2.25	1.25	1.75	0.25	0.28
30102354	C10-3	SAE 08	2.5	2.5	1.5	2.25	0.38	
30102535	C8-4	SAE 06	3.0	2.25	1.25	1.75	0.50	0.28
30102367	C10-4	SAE 08	3.25	2.5	1.5	2.25	0.38	

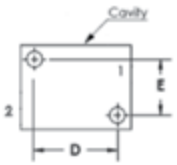

C8-2 BODY

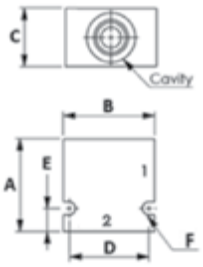

C10-2 TO C16-2 BODIES

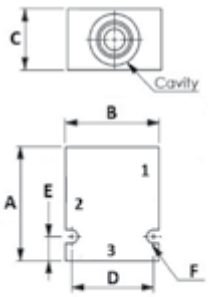

C8-3 AND C10-3 BODIES

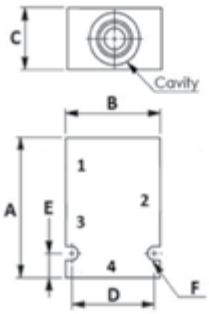

C8-4 AND C10-4 BODIES

COILS

- DIN CONNECTOR MODELS
- OTHER VOLTAGE & TYPE OF CONNECTION AVAILABLE
- LOW POWER CONSUMPTION AVAILABLE. FOR SUBSTANTIAL SAVING.

PART NUMBER	VOLTAGE	WATTS	I. D.	HEIGHT	WIDTH
P-HC-12	12V DC	19	1/2"	1.78	1.25
P-HC-24	24V DC				
P-HC-11	110V AC				
D-HC-12	12V DC	22	1/2"	2.03	1.56
D-HC-24	24V DC				
D-HC-11	110V AC				
L-HC-12	12V DC	22	5/8"	2.03	1.56
L-HC-24	24V DC				
L-HC-11	110V AC				
T-HC-12	12V DC	28	3/4"	1.96	2.38
T-HC-24	24V DC				
T-HC-11	110V AC				
EC04W-200HE	12V DC	20	1/2"	1.41	1.51
EC04W-200HD	24V DC				
EC04W-200HB	110V AC				

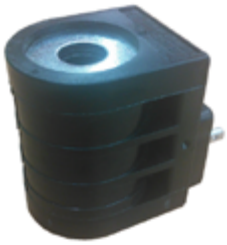

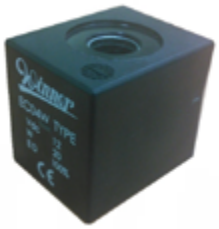

DIN CONNECTORS

PART NUMBER	DESCRIPTION
EMM43650A-DC-BLK	NO LED
EMM43650A-110RAC-LED	NO LED , WITH RECTIFIER (AC TO DC)
EMM43650A-DC-LED	WITH LED 12V/ 24V DC/AC
EMM43650A-110AC-LED	WITH LED 110V DC/AC

OTHER CONNECTORS AVAILABLE

3 WAY / 2 POSITIONS

MAX GPM	MAX PSI	PORTS	VOLTAGE	PART NUMBER	CIRCUIT
10.5	3625	SAE-08	12V DC	ES000277	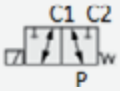 ES & VS MODELS
			24V DC	ES000212	
16	3625	SAE-08	12V DC	VS85-A-12VDC	
			24V DC	VS85-A-24VDC	
21	3000	SAE-08	12V DC	HVC-3/2-10-N-S08-12	
			24V DC	HVC-3/2-10-N-S08-24	
37	3625	SAE-12	12V DC	VS95-A-12VDC	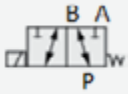 HVC MODEL
				ES000314	
			24V DC	VS95-A-24VDC	
				ES000315	
10.5	3625	SAE-08	12V DC	ES000376	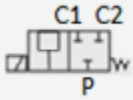
			24V DC	ES000377	
16	3625	SAE-08	12V DC	VS85-D-12VDC	
			24V DC	VS85-D-24VDC	
37	3625	SAE-12	12V DC	VS95-D-12VDC	
			24V DC	VS95-D-24VDC	

VS 95

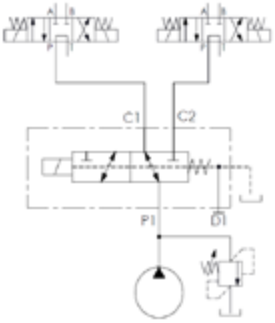

TYPICAL APPLICATION

DIMENSIONS

VS85

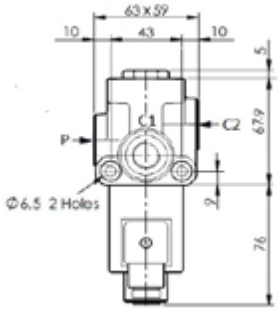

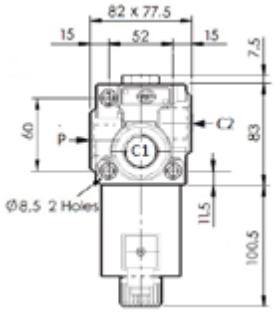

HVC

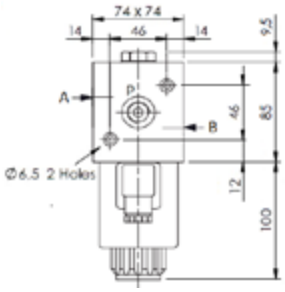

ES

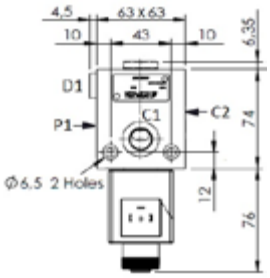

COILS

DIN CONNECTOR MODELS

- OTHER VOLTAGE & TYPE OF CONNECTORS AVAILABLE

PART NUMBER	VOLTAGE	FITS ON
271-0520	12 VDC	VS85, VS155 & VS245F
271-0521	24 VDC	
281-0617	12 VDC	VS95, VS315 & VS285F
281-0618	24 VDC	
AB000167	12 VDC	ES000277 / 312 / 318 / 320 / 376
AB000168	24 VDC	ES000212 / 313 / 319 / 321 / 377
4WE6-12VDC COIL DIN	12 VDC	KVH, 2KVH & MOP
4WE6-24VDC COIL DIN	24 VDC	
4WE10-12VDC COIL DIN	12 VDC	HVC-3/2 & SVK10
4WE10-24VDC COIL DIN	24 VDC	
AB000156	12 VDC	ES000314 / 316
AB000157	24 VDC	ES000315 / 317

6 WAYS / 2 POSITIONS

MAX GPM	MAX PSI	PORTS	VOLTAGE	PART NUMBER	CIRCUIT
13.5	3625	SAE-08	12V DC	KVH6-S08-DC1200	KVH MODELS
				ES000320	
			24V DC	KVH6-S08-DC2400	
				ES000321	
16			12V DC	VS155-12VDC	
			24V DC	VS155-24VDC	
37		SAE-12	12V DC	ES000316	ES & VS MODELS
				VS315-12VDC	
			24V DC	ES000317	
				VS315-24VDC	
50		1" BSP	12V DC	VS400-12VDC	
			24V DC	VS400-24VDC	

VS 315

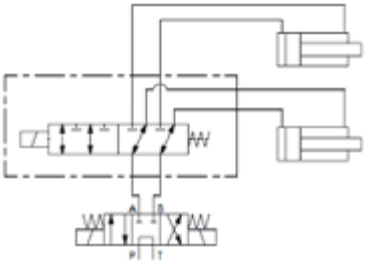

TYPICAL APPLICATION

DIMENSIONS

ES320/321

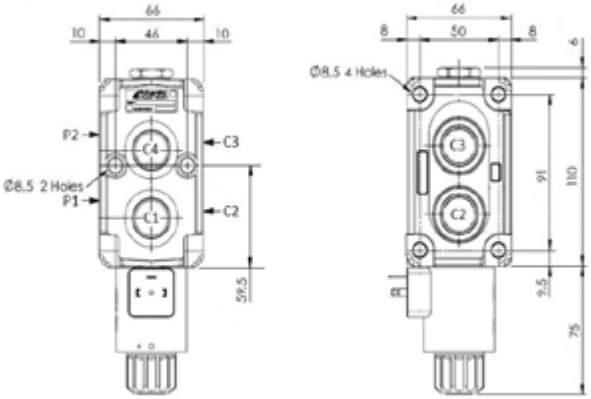

VS155

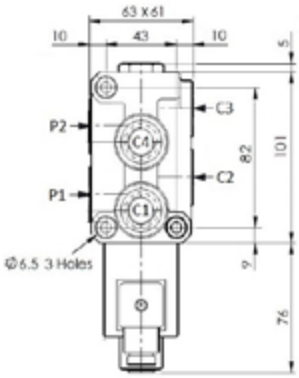

KVH

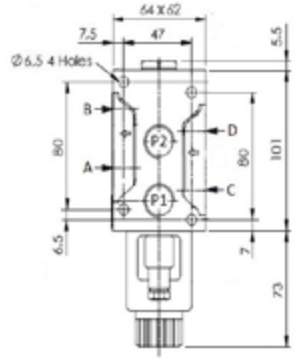

ES316/317

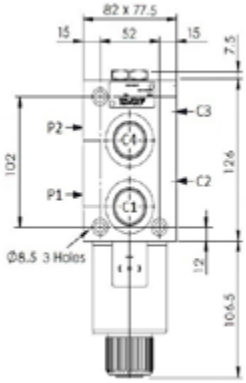

VS315

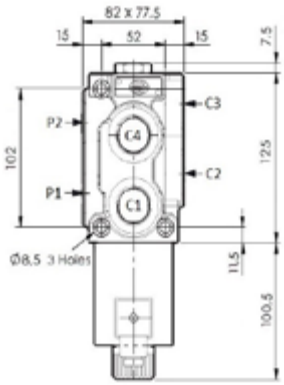

MONOBLOCK 8 WAYS

MAX GPM	MAX PSI	PORTS	VOLTAGE	PART NUMBER
13.5	3625	SAE-08	12V DC*	2KVH6-DC12-S08

*24V AVAILABLE FROM STOCK

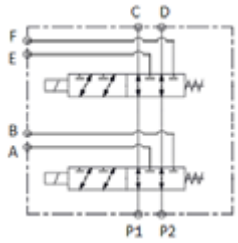

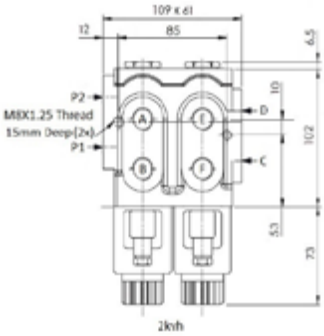

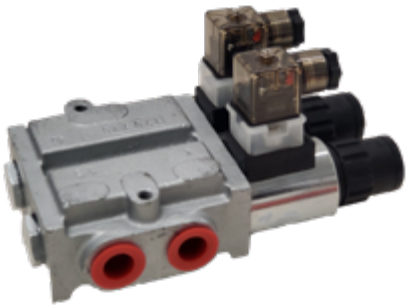

STACKABLE 6 WAYS

MAX GPM	MAX PSI	PORTS	VOLTAGE	WAYS	PART NUMBER
6.5	3625	SAE-04	12V DC	6	VS125F-12VDC
13.5	3625	SAE-08	12V DC	6	VS125F-12VDC
			12V DC	8	MOP066-S08-I2-DC12
			12V DC	6	VS245F-12VDC
			12V DC	6	ES000318
			24V DC	6	ES000319
		SAE-10	12V DC	6	ES000312
			24V DC	6	ES000313
21	3625	SAE-10	12V DC	6	SVK10-DC12-S10-N1
			12V DC	8	SVK10-DC12-S10-N2
24	3625	SAE-10	12V DC	6	VS285F-12VDC

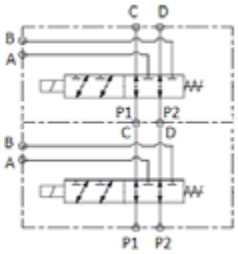

MOP & SKV MODELS
8 WAYS SHOWN

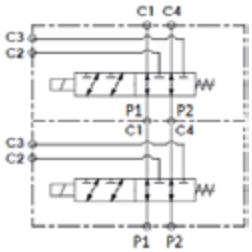

ES & VS MODELS
8 WAYS SHOWN

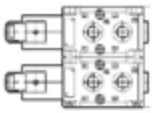

8 ways

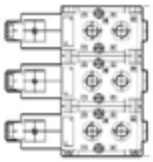

10 ways

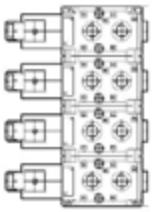

12 ways

DIMENSIONS

SKV 8 WAYS

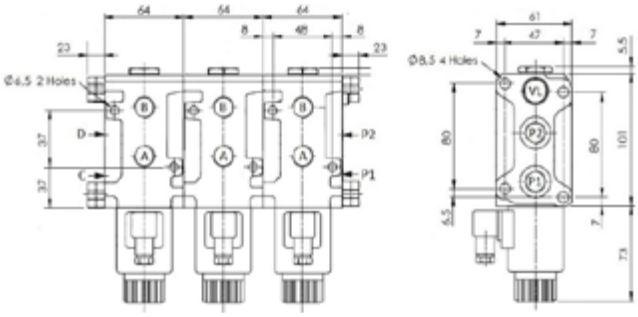

MOP 10 WAYS

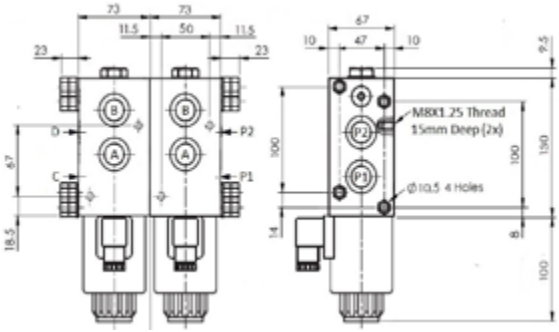

VS285F 8 WAYS

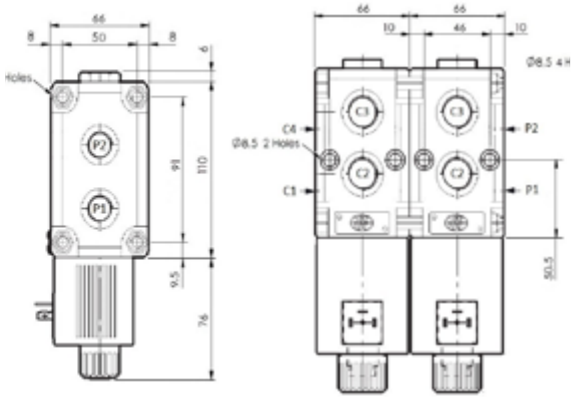

ES 8 WAYS

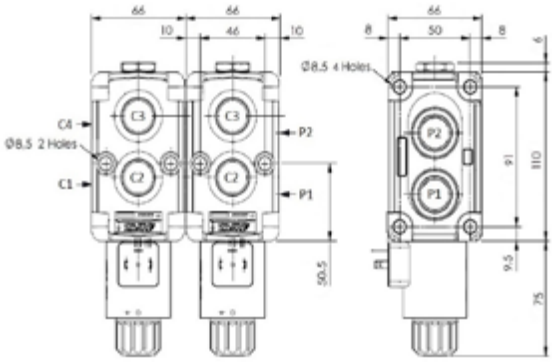

VS245F 8 WAYS

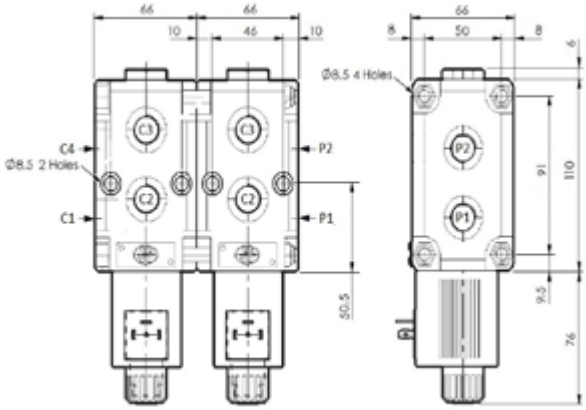

JOYSTICK HANDLES

GENERAL SPECIFICATIONS

- POSSIBLE INSERTION OF PUSH BUTTONS: 1, 2, 4, 6
- PVC CABLES WITH DIAMETER FROM 0.5 MM^2 AND 256 WIRES FOR CABLE, STANDARD WIRE LENGHT 350 MM FROM THE HANDLE'S BASE
- CABLES TERMINAL SUPPLIED WITHOUT LEAD-IN WIRE
- MAX CURRENT ON CONTACTS : 3 AMPERE
- SAFETY PUSH BUTTON ON REQUEST
- ELECTRICAL LIFE : 10^6 CYCLES (1 CYCLE = 2 SEC. "ON" / 2 SEC. OFF WITH CURRENT = 3A VOLTAGE = 12VDC AND WITH ARC SUPPRESSOR DIODE) 10^5 CYCLES IF USED WITH CURRENT = 3A VOLTAGE = 12VDC AND WITH DIRECT CONNECTION

ECONOMIC HANDLES

PART NUMBER	DESCRIPTION
G9466012331	1 CONTACT
G9466012351	2 CONTACTS
E9634005553	2 DETENTS

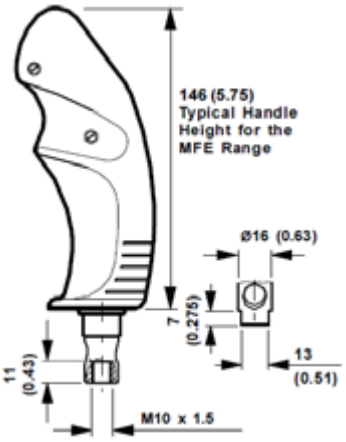

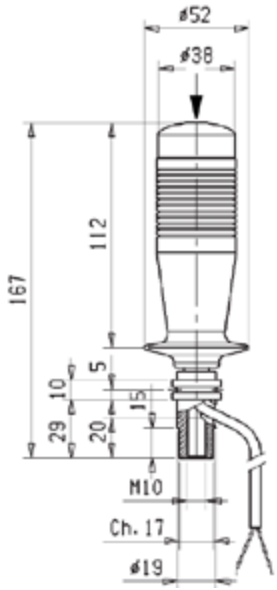

NUMBER OF PUSH BUTTON			
E9634006903	E9634006893	E9634006923	E9634006913

3 WAYS PUSH-PULL DIVERTERS

- 2500 PSI MAXIMUM PRESSURE
- 20 GPM MAXIMUM FLOW
- LEVER HANDLE, END CAP KIT ALSO AVAILABLE

PART NUMBER	PORTS
SS-2A1D	1/2 NPT
SS-3A1D	SAE 08

6 WAYS PUSH-PULL DIVERTERS

- 2500 PSI MAXIMUM PRESSURE
- KNOB, SPRING OFFSET, ENDCAP AVAILABLE

PART NUMBER	MAX GPM	PORTS
DS-1A1E	20	1/2 NPT
DS-3A1E		SAE-10
DS-4A1E	40	3/4 NPT
DS-5A1E		SAE-12

DOUBLE - 6 WAYS

- 3600 PSI MAXIMUM PRESSURE
- 13 GPM MAXIMUM FLOW:
- 2 POSITIONS DETENDED
- PORTS: SAE 08

PART NUMBER	DESCRIPTION	DESCRIPTION
DF06/6-A-S		OPEN CENTER IN TRANSITION
DF06/6-C-S		CLOSED CENTER IN TRANSITION

3 WAYS ROTARY DIVERTERS

- CLOSED TRANSITION
- OPEN TRANSITION ALSO AVAILABLE

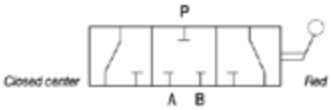

PART NUMBER	MAX PSI	MAX GPM	PORTS
FD3W-01-C-S	5075	8	SAE-06
FD3W-02-C-S	4560	16	SAE-08
FD3W-03-C-S	4060	24	SAE-10
FD3W-04-C-S	3625	32	SAE-12
FD3W-05-C-S	3200	48	SAE-16

6 WAYS ROTARY FLOW DIVERTERS

- CLOSED TRANSITION
- OPEN TRANSITION ALSO AVAILABLE

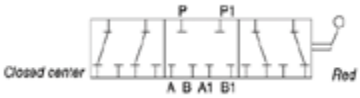

PART NUMBER	MAX PSI	MAX GPM	PORTS
FD6W-01-C-S	5075	8	SAE-06
FD6W-02-C-S	4560	16	SAE-08
FD6W-03-C-S	4060	24	SAE-10
FD6W-04-C-S	3625	32	SAE-12
FD6W-05-C-S	3200	48	SAE-16

BALL VALVES

2 WAY

PART NUMBER	PORTS	MAX PSI
BV-1/2NPT	NPT 1/2	7252
BV-1/4NPT	NPT 1/4	7252
BV-1NPT	NPT 1	4569
BV-3/4NPT	NPT 3/4	4569
BV-3/8NPT	NPT 3/8	7252
BV-SAE04	SAE 4	7252
BV-SAE06	SAE 6	7252
BV-SAE08	SAE 8	7252
BV-SAE12	SAE 12	4569
BV-SAE16	SAE 16	4569
BV-SAE20	SAE 20	4569
BV-SAE24	SAE 24	4569

2 WAY WITH LOCKING DEVICE

PART NUMBER	PORTS	MAX PSI
BVL-SAE04	SAE 04	7252
BVL-SAE06	SAE 06	7252
BVL-SAE08	SAE 08	7252
BVL-SAE12	SAE 12	4569
BVL-SAE16	SAE 16	4569
BVL-SAE20	SAE 20	4569
BVL-SAE24	SAE 24	4569
BVL-SAE32	SAE 32	4569

3 WAY

PART NUMBER	PORTS	MAX PSI
BV3-SAE04	SAE 04	7252
BV3-SAE06	SAE 06	7252
BV3-SAE08	SAE 08	7252
BV3-SAE12	SAE 12	4569
BV3-SAE16	SAE 16	4569
BV3-SAE20	SAE 20	4569
BV3-SAE24	SAE 24	4569
BV3-SAE32	SAE 32	4569

4 WAY

PART NUMBER	PORTS	MAX PSI
BV4-SAE04	SAE 04	4569
BV4-SAE06	SAE 06	
BV4-SAE08	SAE 08	
BV4-SAE12	SAE 12	
BV4-SAE16	SAE 16	

CHECK VALVES

- FREE FLOW IN ONE DIRECTION AND BLOCKED IN THE OTHER
- ZINC CLEAR PLATED BODY
- METAL TO METAL SEAT
- SAE THREADS AVAILABLE

PART NUMBER	PORTS NPT	MAX PSI	MAX GPM	SPRING BY-PASS	DIMENSIONS	
					B	C
HSP-1000-2-5	1/4"	6000	6	5 PSI	2.44	0.87
HSP-1000-2-65				65 PSI		
HSP-1000-3-5	3/8"	6000	9.5	5 PSI	2.87	0.95
HSP-1000-3-65				65 PSI		
HSP-1000-4-5	1/2"	5000	18	5 PSI	3.5	1.14
HSP-1000-4-65				65 PSI		
HSP-1000-6-5	3/4"	5000	30	5 PSI	4.25	1.5
HSP-1000-6-65				65 PSI		
HSP-1000-8-5	1"	5000	35	5 PSI	5.12	1.69
HSP-1000-8-65				65 PSI		
HSP-1000-10-5	1 1/4"	3000	60	5 PSI	5.56	2.4
HSP-1000-10-65				65 PSI		
HSP-1000-12-5	1 1/2"	3000	90	5 PSI	5.56	2.56
HSP-1000-12-65				65 PSI		
HSP-1000-16-5	2"	3000	145	5 PSI	7.91	3.15
HSP-1000-16-65				65 PSI		

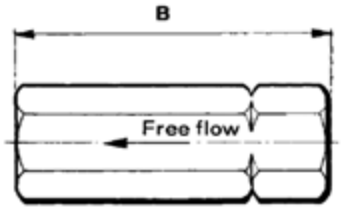

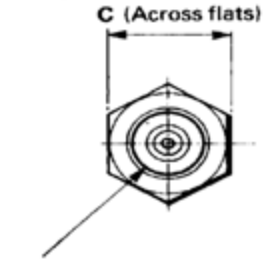

(A) FEMALE THREAD BOTH ENDS

VELOCITY FUSES

- PROVIDES FULL-LINE SHUT-OFF IN THE EVENT OF LINE FAILURE
- CLOSING TOLERANCE 15% / - 0%
- MAX PRESSURE: 3500 PSI
- RE-OPENING DIFFERENTIAL: 50 PSI
- FEMALE NPT TO MALE NPT

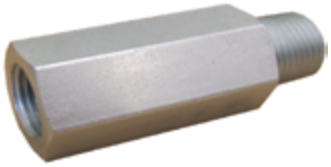

PART NUMBER	CLOSING GPM	PORTS NPT	DIMENSIONS	
			L	HEX
28900-503-3	3	3/8"	2.7	0.88
28900-503-6	6			
28900-504-7	7	1/2"	3.0	1.13
28900-504-8	8			
28900-504-12	12			

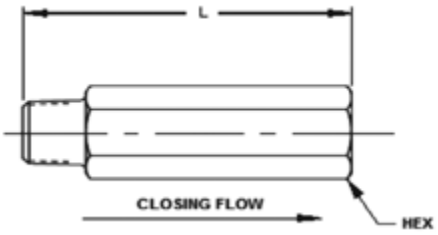

SINGLE PILOT OPERATED CHECK VALVES

PART NUMBER	PORTS	MAX GPM	MAX PSI	PILOT RATIO	SCHEMATIC	CONFIGURATION
PS-POC-B-N	1/4 NPT	10	3000	4 : 1	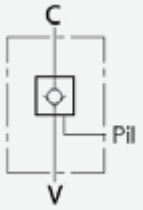	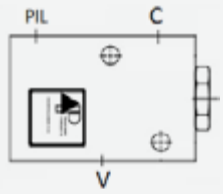
PS-POC-B-S	SAE-06					
RD-1637	3/8 NPT	15				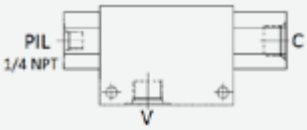
RD-1650	1/2 NPT	20				
LVPL-02	SAE-08	10.5	5075	6.2 : 1		
LVSL-02		9	3750	7 : 1	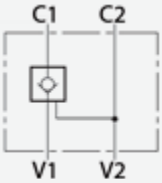	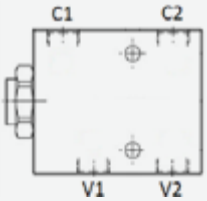
LVSL-025	SAE-10			7 : 1		

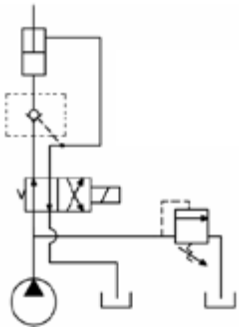

RD-16

LVPL

LVSL

DOUBLE PILOT OPERATED CHECK VALVES

PART NUMBER	PORTS	MAX GPM	MAX PSI	PILOT RATIO	SCHEMATIC	CONFIGURATION
MD-POC-B-S	SAE-04	5	3000	6.7 : 1	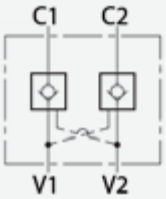	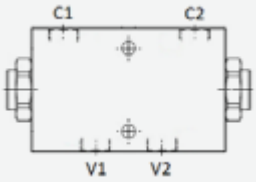 LVDL
LVDL-01	SAE-06	5	3750	4:1		
LVDT-01		7	5075			
PD-POC-B-S		10	3000			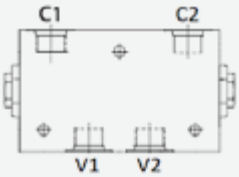 MD, PD, DD, RD
DD-POC-B-N	3/8 NPT	15				
LVDL-02	SAE-08	9	3750	7 : 1		
LVDT-02		12		4 : 1		
RD-1450	1/2 NPT	20	3000			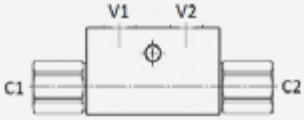 LVDT
LVDL-03	SAE-10	16	3750	3.4 : 1		
RD-1475	3/4 NPT	30	3000	4 : 1		

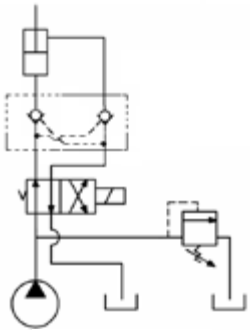

LVDL

RD-14

LVDT

COUNTERBALANCE VALVES

- INTERCHANGEABLE WITH SUN CARTRIDGES
- 5000 PSI MAXIMUM PRESSURE

PART NUMBER	MAX GPM	CAVITY	PSI RANGE	RATIO	SUN NO
CB11A33HL	15	T-11A	1015 - 4060	3: 1	CBCA-LHN
CB11A34JL			2030 - 5070	4.5: 1	CBCG-LJN
CB11A30JL			2030 - 5070	10: 1	CBCH-LJN
CB2A33HL	30	T-2A	2000 - 5000	3: 1	CBEA-LJN
CB2A34JL				4.5: 1	CBEG-LHN
CB2A30JL				10: 1	CBEH-LHN
CB17A3DJL	60	T-17A	2000 - 5000	3: 1	CBGG-LJN
CB17A3JJL				4.5: 1	CBGH-LJN

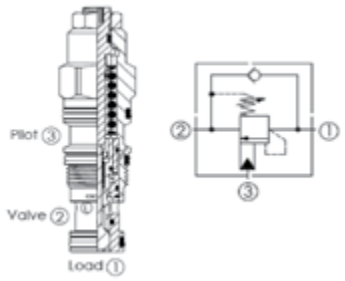

PILOT OPERATED CHECK VALVES

- 5000 PSI MAXIMUM PRESSURE
- PILOT RATIO: 3:1

PART NUMBER	MAX GPM	CAVITY	SUN NO
CO11A3020N	15	T-11A	CKCB-XCN
CO2A3020N	30	T-2A	CKEB-XCN
CO17A3020N	60	T-17A	CKGB-XCN
CO19A3020N	120	T-19A	CKIB-XCN

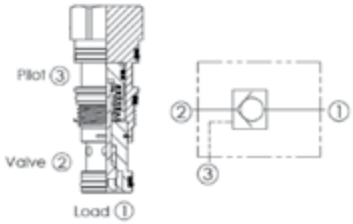

LINE MOUNT BODIES

- MADE IN ALUMINUM
- 3000 PSI MAXIMUM PRESSURE
- DUCTILE IRON AVAILABLE ON DEMAND

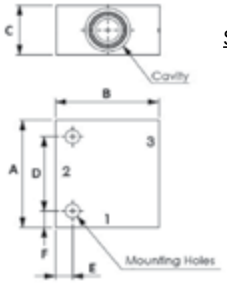

SINGLE BODY

DOUBLE BODY

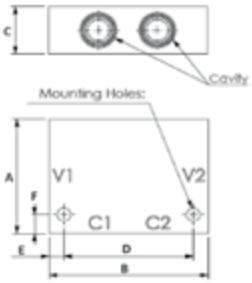

SINGLE BODIES											
PART NUMBER	CAVITY	PORTS 1 & 2	PORT 3	SUN NO	DIMENSIONS						
					A	B	C	D	E	F	HOLES (2)
11A-S-90-S06	T-11A	SAE 06	SAE 06	ECI	3.0	2.75	1.26	2.09	0.38	0.44	0.34
11A-S-90-S08	T-11A	SAE 08	SAE 06	ECJ							
2A-S-90-S12	T-2A	SAE 12	SAE 06	BCL	3.25	3.0	1.5	2.25	0.5	0.5	0.42
17A-S-90-S16	T-17A	SAE 16	SAE 06	HCM	4.25	4.0	2.36	2.75	0.75	0.75	
19A-S-90-S20	T-19A	SAE 20	SAE 06	KCN	5.0	5.0	3.0	4.0	0.5	0.5	

DOUBLE BODIES										
PART NUMBER	CAVITY	PORTS	SUN NO	DIMENSIONS						
				A	B	C	D	E	F	HOLES (2)
11A-D-X-S08	T-11A	SAE 08	YEJ	3.25	3.0	1.5	2.25	0.5	0.5	0.42
2A-D-X-S12	T-2A	SAE 12	YAL	4.25	4.0	2.36	2.75	0.75	0.75	
17A-D-X-S16	T-17A	SAE 16	YJM	5.0	5.0	3.0	4.0	0.5	0.5	

DIRECT ACTING RELIEF VALVES

PART NUMBER	PORTS	PSI RANGE	MAX GPM	MAX PSI
RD-1837-S	3/8 NPT	1000 - 2500	8	2500
RD-1850-S	1/2 NPT		16	
RD-1850-H			16	
RD-1875-S	3/4 NPT		20	
PRL35-02-20A	SAE-08	580 - 3000	9	5075
PRL35-02-30A		1450 - 5075		
PRL80-03-20A	SAE-10	435 - 3770	21	
PRL80-04-20A	SAE-12			
PRL150-05-30A	SAE-16	725 - 5075	39	

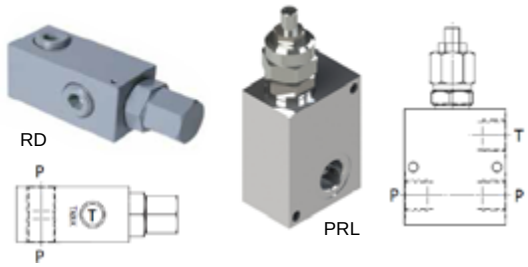

PILOT OPERATED RELIEF VALVES

PART NUMBER	PORTS	PSI RANGE	MAX GPM	MAX PSI
RV-4L	1/2 NPT	500 - 1500	30	3000
RV-4H		1500 - 3000		
RV-2L	3/4 NPT	500 - 1500		
RV-2H		1500 - 3000		
RV-1L	SAE-12	500 - 1500		
RV-1H		1500 - 3000		

DUAL RELIEF VALVES, PILOT OPERATED

PART NUMBER	PORTS	PSI RANGE	MAX GPM	MAX PSI
SA-00-15-15	SAE-08	150 - 1500	10	3000
SA-00-30-30		1500 - 3000		
SA-00-40-40		2500 - 4000		
DPRL35-02-30A	SAE-08	1450 - 5000	9	5000
DPRL80-04-30A	SAE-12	1880 - 5000	21	

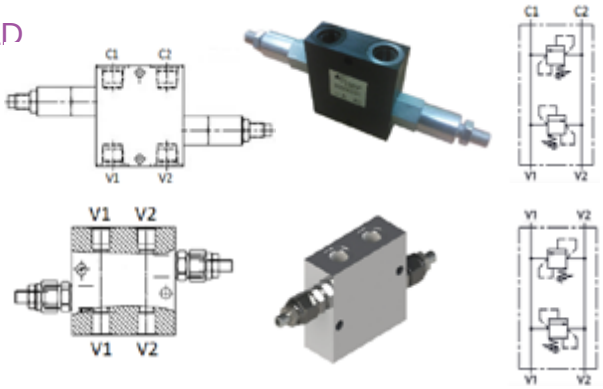

DUAL RELIEF VALVES, 6 PORTS

PART NUMBER	PORTS	PSI RANGE	MAX GPM	MAX PSI
DRV-4LL	1/2 NPT	500 - 1500	30	3000
DRV-4HH		1500 - 3000		
DRV-5LL	SAE-08	500 - 1500		
DRV-5HH		1500 - 3000		
DRV-2LL	3/4 NPT	500 - 1500		
DRV-2HH		1500 - 3000		
DRV-1LL	SAE-12	500 - 1500		
DRV-1HH		1500 - 3000		

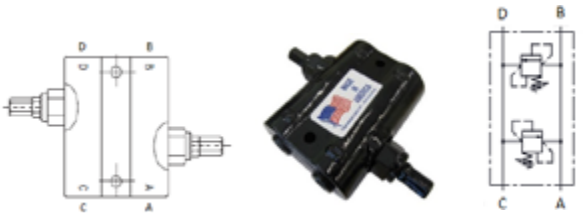

DUAL RELIEF VALVES, 6 PORTS

PART NUMBER	PORTS	PSI RANGE	MAX GPM	MAX PSI
HIC-053	SAE-08	1450 - 5000	9	5000

DIRECT ACTING RELIEF VALVES

PART NUMBER	MAX GPM	MAX PSI	PSI RANGE	CAVITY	SUN NO
DE-RVA-00-1500	8	4000	200-1500	C10-2	
DE-RVA-00-3000			1500-3000		
DE-RWA-00-3000			100-3000		
DE-RCA-00-3500	12	3500	250-3500		
RD10A25AL	25	5000	100-3000	T-10A	RDDA-LAN
RD3A25AL	50			T-3A	RDFA-LAN
RD16A25AL	100			T-16A	RDHA-LAN

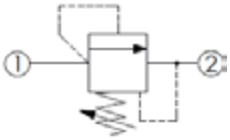

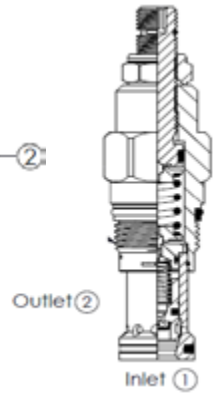

PILOT OPERATED RELIEF VALVES

PART NUMBER	GPM	MAX PSI	PSI RANGE	CAVITY	SUN NO
DE-RVP-00-4000	20	3500	500-3500	C10-2	
RP10A20AL	25	5000	100-3000	T-10A	RPEC-LAN
RP3A20AL	50			T-3A	RPGC-LAN
RP16A20AL	100			T-16A	RPIC-LAN

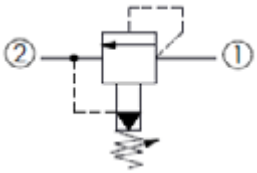

LINE MOUNT BODIES

- MADE IN ALUMINUM
- 3000 PSI MAXIMUM PRESSURE
- GAUGE PORT ON SELECTED MODELS
- DUCTILE IRON AVAILABLE ON DEMAND

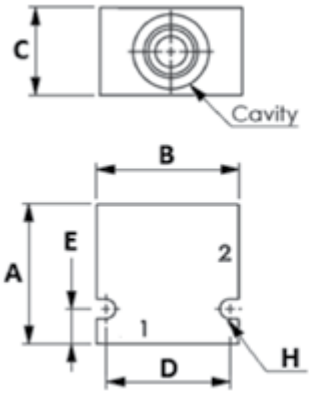

DIMENSION FOR C10-2 BODIES

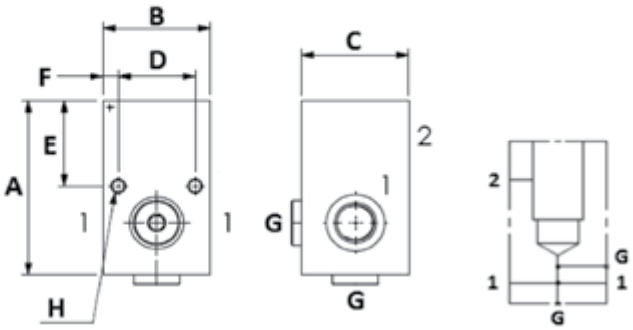

DIMENSION FOR T-* BODIES

SINGLE BODIES

PART NUMBER	CAVITY	PORTS 1 & 2	SUN NO	DIMENSIONS							
				A	B	C	D	E	F	G	H (2)
30102359	C10-2	SAE 08		2.12	2.0	1.50	1.75	0.50	-	-	0.28
30102364		SAE 06									
10A-S-T-S08+G	T-10A	SAE 08	FEJ	2.94	1.75	1.75	1.25	1.44	0.25	1/4 NPT	1/4-20 UNC 1/2" DEEP
3A-S-T-S12+G	T-3A	SAE 12	CEL	3.25	2.0	2.0	1.50	1.37	0.25		
16A-S-T-S16+G	T-16A	SAE 16	IEM	4.0	3.0	2.25	-	3.0	0.5		0.42

PRESSURE CONTROL

FUNCTION	PART NUMBER	MAX GPM	MAX PSI	PSI RANGE	CAVITY	SCHEMATIC
VENTED RELIEF	RV11A30AL	15	5000	100 - 3000	T11-A	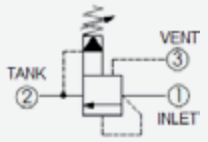
	RV2A30AL	30			T2-A	
	RV17A30AL	60			T-17A	
	RV19A30AL	120			T-19A	
PRESSURE REDUCING	PB11A30AL	10	5000	100 - 3000	T11-A	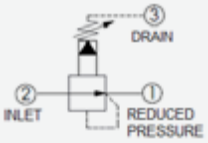
	PB2A30AL	20			T2-A	
	PB17A30AL	40			T-17A	
	PB19A30AL	80			T-19A	
PRESSURE REDUCING/ RELIEVING	DF-PRP-00-3000	10	3000	100 - 3000	C10-3	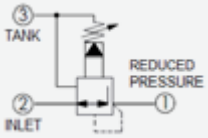
	SK-PRP-00-3000	20		500 - 3000	C16-3	
	PP11A30AL	10	5000	100 - 3000	T11-A	
	PP2A30AL	20			T2-A	
	PP17A30AL	40			T-17A	
	PP19A30AL	80			T-19A	
SEQUENCE	SP11A30AL	15	5000	100 - 3000	T11-A	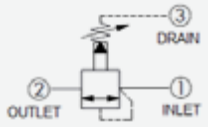
	SP2A30AL	30			T2-A	
	SP17A30AL	60			T-17A	
	SP19A30AL	120			T-19A	
UNLOADING	DF-PWE-00-0425	10	3000	50-425	C10-3	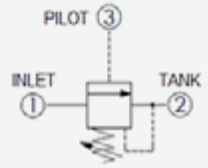
	DF-PWE-00-1500			425-1500		

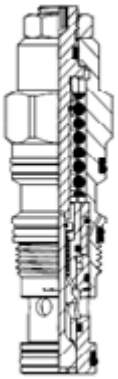

LINE MOUNT BODIES

- 3000 PSI MAXIMUM PRESSURE
- DUCTILE IRON AVAILABLE ON DEMAND

PART NUMBER	CAVITY	PORTS 1 & 2	PORT 3	DIMENSIONS						
				A	B	C	D	E	F	HOLES (2)
30102354	C10-3	SAE 08	SAE 08	2.5	2.5	1.5	2.25	0.38	0.28	-
30102576	C16-3	SAE 12	SAE 12	4.0	4.0	2.0	3.38	0.88	-	0.38
11A-S-90-S-8	T-11A	SAE 08	SAE 06	3.0	2.75	1.26	2.09	0.38	0.44	0.34
2A-S-90-S12	T-2A	SAE 12	SAE 06	3.25	3.0	1.5	2.25	0.5	0.5	0.42
17A-S-90-S16	T-17A	SAE 16	SAE 06	4.25	4.0	2.36	2.75	0.75	0.75	-
19A-S-90-S20	T-19A	SAE 20	SAE 06	5.0	5.0	3.0	4.0	0.5	0.5	-

C**-3 BODIES

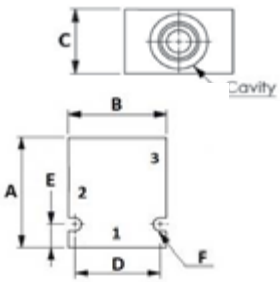

T**A BODIES

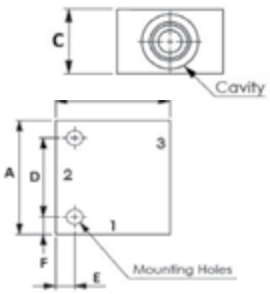

NEW EASY TOOL TO FIND YOUR WINNER CARTRIGES EQUIVALENT AT

SUN2WIN.HYDROLICO.COM

- SUPERIOR QUALITY
- ISO AND SUN CAVITIES
- HEAT TREATMENT AND PLATING IN HOUSE
- 100% TESTED
- HIGH STANDARD OF MANIFACTURING
- ALL VALVES ARE ZINC-NICKEL PLATED. PROVIDES PROTECTION OF OVER 1000 HOURS BASED ON ASTM B117 SALT SPRAY TEST COMPARE WITH 24 HOURS WHEN IT'S ONLY ZINC PLATING.

Winner Hydraulics

IN-LINE FLOW CONTROL VALVES

FLOW CONTROL

• CONTROL FLOW IN ONE DIRECTION

CODE	NPT	SAE	MAX GPM	MAX PSI
F420S	-	SAE4	3	5076
F400S	1/4	-	5	
F620S	-	SAE6		
F600S	3/8	-	11	
F820S	-	SAE8		
F800S	1/2	-	17	
F1020S	-	SAE10		
F1200S	3/4	-	32	
F1220S	-	SAE12		
F1600S	1	-	48	
F1620S	-	SAE16		

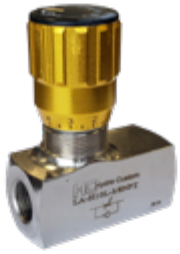

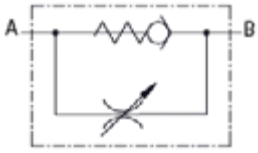

FLOW CONTROL, PRESSURE COMPENSATED

• CONTROL FLOW IN ONE DIRECTION

PART NUMBER	PORTS	MAX PSI	MAX GPM
FRC90-01-SAE6	SAE-06	3625	4.5
FRC90-02-SAE8	SAE-08		

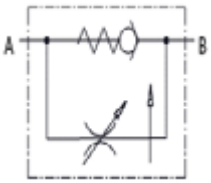

NEEDLE VALVES

• CONTROL FLOW IN BOTH DIRECTIONS

PART NUMBER	PORTS	MAX PSI	MAX GPM
NV-02	1/4 NPT	5000	5
NV-03	3/8 NPT		8
NV-04	1/2 NPT		15
FRB-90-03N	1/2 NPT		13

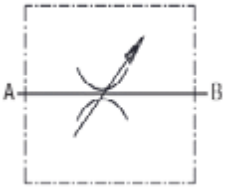

3 WAYS PRIORITY VALVE, EXCESS TO TANK, WITH KNOB

• 3000 PSI MAXIMUM PRESURE
• PRESSURE COMPENSATED

PART NUMBER	MAX GPM		PORTS
	INLET	CONTROL	
PVET-02	10.5	6.5	SAE-08
PVET-04	39	23.5	SAE-12
PVET-05	74	50	SAE-16

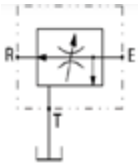

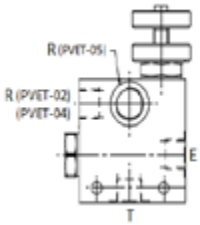

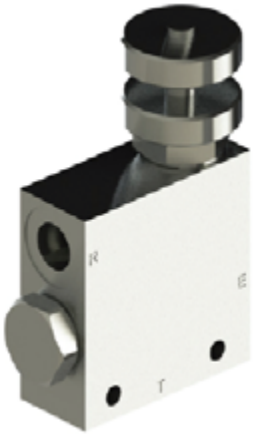

3 WAYS PRIORITY VALVE, EXCESS TO TANK, WITH LEVER

- 3000 PSI MAXIMUM PRESURE
- 30 GPM MAXIMUM FLOW

PART NUMBER	EQUIVALENT	PORTS	CONTROL FLOW
W-1950-8	FC51-1/2 37	1/2 NPT	0 - 8 GPM
W-1908-8	FC51-8	SAE-08	
W-1950-16	FC51-1/2	1/2 NPT	0 - 16 GPM
W-1975-30	FC51-3/4	3/4 NPT	0 - 30 GPM
W-1912-30	FC51-12	SAE-12	

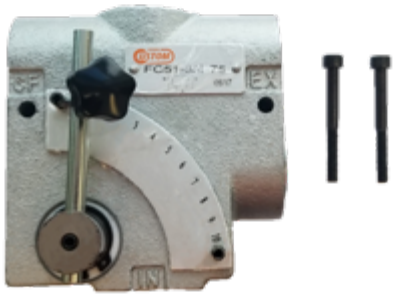

MODEL WITH RELIEF			
PART NUMBER	EQUIVALENT	PORTS	CONTROL FLOW
WR-1937-8	FCR51-3/8	3/8 NPT	0 - 8 GPM
WR-1950-16	FCR51-1/2	1/2 NPT	0 - 16 GPM
WR-1975-30	FCR51-3/4	3/4 NPT	0 - 30 GPM
WR-1912-30	FCR51-12	SAE-12	

W, WR & FC MODELS

PART NUMBER		PORTS	CONTROL FLOW
SIDE PORTS	TOP PORTED		
RD-1937-8	RD-137-8	3/8 NPT	0 - 8 GPM
RD-1950-8	RD-150-8	1/2 NPT	
RD-1908-8	RD-108-8	SAE-08	
RD-1950-16	RD-150-16	1/2 NPT	0 - 16 GPM
RD-1975-16	RD-175-16	3/4 NPT	
RD-1975-30	RD-175-30	3/4 NPT	0 - 30 GPM
RD-1912-30	RD-112-30	SAE-12	

RD-1950

MODEL WITH RELIEF			
PART NUMBER		PORTS	CONTROL FLOW
SIDE PORTS	TOP PORTED		
RDRS-1950-16	RDRS-150-16	1/2 NPT	0 - 16 GPM
RDRS-1975-30	RDRS-175-30	3/4 NPT	0 - 30 GPM

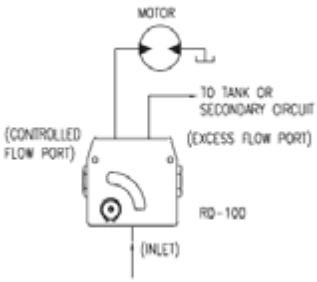

FIXED FLOW PRIORITY DIVIDERS

- 3000 PSI MAXIMUM PRESSURE
- DUCTILE IRON AVAILABLE ON DEMAND

PART NO	FIXED FLOW	RELIEF	INLET & EXCESS PORT	CONTROL FLOW PORT
RD-405-3	3 GPM	NO	3/4 NPT	1/2 NPT
RD-405-6	6 GPM			
RD-405-R3	3 GPM	YES		
RD-405-R6	6 GPM			
RD-412-1,5	1,5 GPM	YES	SAE 12	SAE 08

RD-400

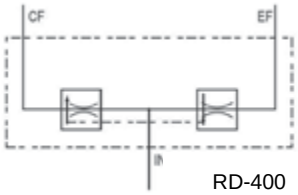

RD-400

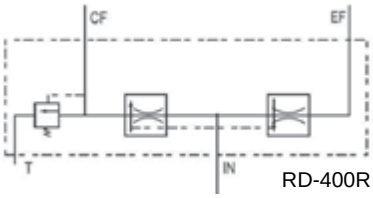

RD-400R

RD-400R

PRESSURE COMPENSATED FLOW DIVIDERS

- DIVIDER / COMBINER
- 3000 PSI MAXIMUM PRESSURE
- PRECISE AT +/- 10% ACCURACY
- COMMON CAVITIES

PART NUMBER	INLET FLOW	PORT SIZE
DG-FDA-00-50-03	2-3 GPM	SAE 08 (USE BODY 30102362)
DG-FDA-00-50-06	3-6 GPM	
DG-FDA-00-50-09	6-9 GPM	
DG-FDA-00-50-12	9-12 GPM	
SN-FDA-00-50-15	8-15 GPM	SAE 12 (USE BODY 30102577)
SN-FDA-00-50-25	15-25 GPM	
SN-FDA-00-50-40	20-40 GPM	

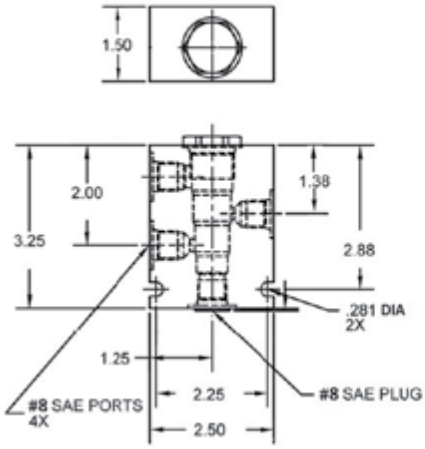

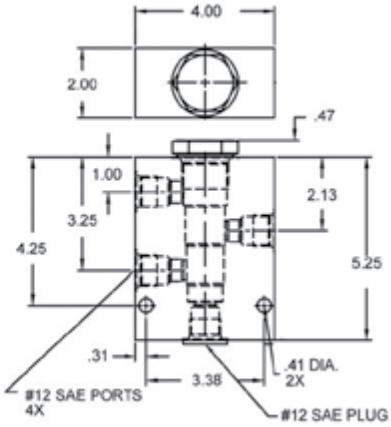

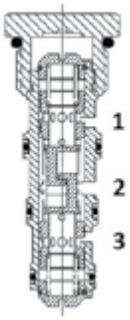

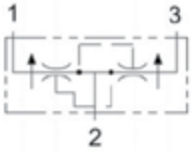

GEAR DIVIDERS, VIVOIL RV, RV2, MIA-FD

- SPLIT FLOW EQUALLY WITH +/- 1,5% ACCURACY
- INTEGRATED RELIEFS TO REALIGN CYLINDERS WHEN THEY REACH END OF CYCLE
- FOR A QUIET OPERATION, SELECT SPEED AT REC FLOW

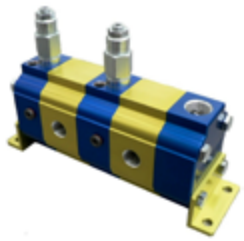

PART NUMBER	NUMBER OF SECTIONS	DISPLACEMENT IN³ / REV.	RPM		GPM		MAX PSI	PORT SIZE	
			MIN	MAX	MIN	MAX		IN	OUT
ARV02B01	2	0.01	1155	7392	0.10	0.64	3045	SAE-4	SAE-4
ARV02B06	2	0.05	1200	5867	0.53	1.27	3045		
ARV02B20	2	0.13	1175	6095	1.3	6.9	3190	SAE-8	SAE-6
ARV02B27	2	0.26	1060	5400	2.4	12.2	3190		
ARV02B34	2	0.48	1082	4520	4.5	18.0	3045		
ARV02B49	2	0.85	1200	2500	8.9	18.4	3000	SAE-12	SAE-10
ARV02B49	2	1.34	1200	2500	13.9	29.0	2600		
ARV04B20	4	0.13	1175	6095	2.6	13.7	3190	SAE-8	SAE-6
ARV04B27	4	0.26	1060	5400	4.7	24.3	3190		

GEAR DIVIDERS

- SPLIT FLOW EQUALLY WITH +/- 2% ACCURACY
- INTEGRATED RELIEFS TO REALIGN CYLINDERS WHEN THEY REACH END OF CYCLE
- FOR A QUIET OPERATION, SELECT SPEED AT RECOMMANDED FLOW
- CAN BE USE INTERNAL OR EXTERNAL DRAIN
- AVAILABLE FROM 2 TO 16 SECTIONS

PART NUMBER	NUMBER OF SECTIONS	DISPLACEMENT IN³ / REV.	RPM		GPM		MAX PSI	PORT SIZE	
			MIN	MAX	MIN	MAX		IN	OUT
PM2-RV **	2	0.11	500	3500	0.5	3.5	2000	1/2 NPT	3/8 NPT
PM6-RV **	2	0.32			1.35	9.5	1500		
HPR23	2	0.70			3.0	21	3000	SAE 16	SAE 12
HPR27	2	1.46			6.3	44	3000		
PPM2-RV **	4	0.11			1.0	7.0	1500	1/2 NPT	3/8 NPT
HPR21-59	4	0.41			3.57	25	3000	SAE 16	SAE 12
HPR23-59	4	0.70			6	42	3000		

*** Model available without reliefs*

ASA MODELS

- DIAPHRAGM TYPE
- REPAIRABLE
- SCHRADER VALVE ON TOP

PART NUMBER	VOLUME	MAX PSI	PORT "H"	DIM "A"	DIAM. "C"
060932	0.2 L	5880	G 1/4"	5.91"	3.33"
060972	0.5 L		G 3/8"	7.24"	4.49"
060782	0.7 L	3675		7.76"	4.7"
060110	1 L	5880	M18X1.5		6.44"

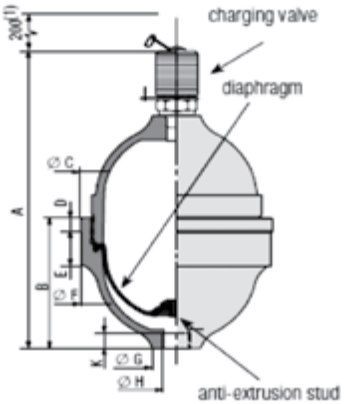

ACSA & ACSL MODELS

- ECONOMICAL
- NON-REPAIRABLE
- BLADDER TYPE

PART NUMBER	VOLUME	MAX PSI	PORT "B"	DIM "A"	VALVE
068275	0.7 L	3000	SAE 08	6.93"	SCREW
066845		4800			
065947					SCHRADER
068280	1 L	3000		9.69"	SCREW
066855		4800			
065965					SCHRADER
065945	1.5 L	4800		15.4"	SCREW
066865				12.4"	SCREW
068525	2L	3000			SCHRADER
066875	2.5 L	4800	SAE 08	18.27"	SCREW
066685			SAE 12		SCHRADER
066885	4 L	4800	SAE 08	27.4"	SCREW
066690			SAE 12		SCHRADER

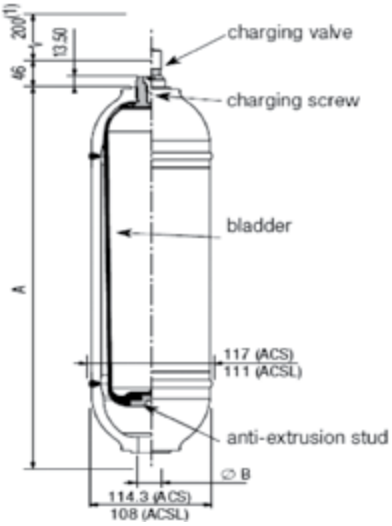

ABVE MODELS

- BLADDER TYPE
- REPAIRABLE
- SCHRADER VALVE ON TOP

PART NUMBER	VOLUME	MAX PSI	PORT "B"	DIM "A"	DIAM. "C"
066850	4 L	5145	SAE 20	17.24"	6.7"
066860	10 L	4800		22.8"	9.02 "
066870	20 L			34.6"	
066880	32 L			55.12"	
066890	50 L			75.35"	

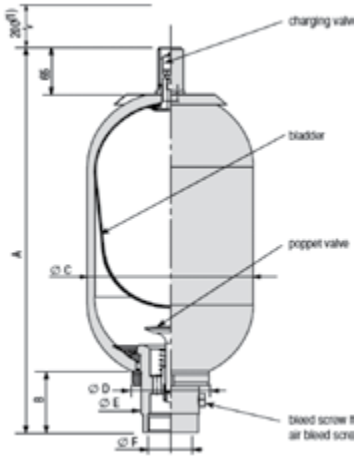

PISTON ACCUMULATORS

- 3000 PSI MAXIMUM WORKING PRESSURE
- DESIGNED FOR MOBILE APPLICATION
- REACT FAST
- LONG SERVICE LIFE
- REPAIRABLE
- COMPACT DESIGN
- COMMON SHRADER VALVE

PART NO	VOLUME (IN^3)	DIM "A"
AC-0006-3	6	6.50
AC-0024-3	24	12.25
AC-0052-3	52	21.25

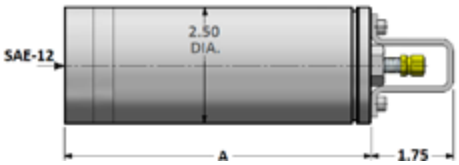

FIXATION CLAMPS

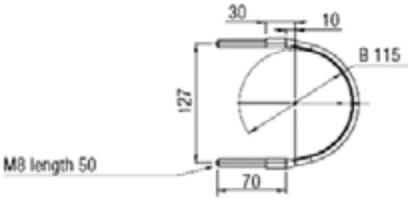

CD01028
FITS ON ACS MODELS

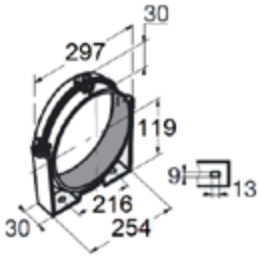

254007
FOR ABVE 10L TO ABVE 50L

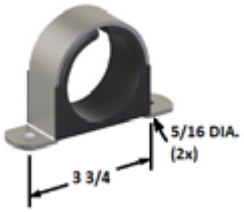

AC BRACKET
FITS ON AC MODELS

PART NO	USE WITH MODELS	DIMENSIONS (MM)					
		A	B	C	D	H	J
254021	ACS, ASA 0.5L / 0.7L	163	144	90	118.5	78	3
254022	ASA 1L & ABVE 4L	210	200	130	168	92	4

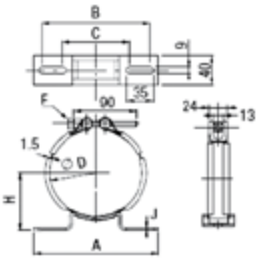

FIXATION SEAT

PART NO	USE WITH MODELS	DIMENSIONS (MM)					
		DIA.	A	B	C	d	e
254012	ABVE4	108	80	210	175	150	40
254008	ABVE10 TO ABVE50	152	100	260	225	200	

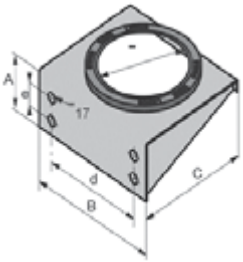

CHARGING KIT

066650 COMPLETE KIT
- ADAPTS TO MOST OF VALVES
- INCLUDES HOSE

066660 CHARGING KIT
ADAPTS TO MOST OF VALVES

701630 (NO GAUGE)
FITS ON SCHRADER VALVES ONLY

704230
HOSE KIT
FOR 701630

PRESSURE SWITCHES

- 9000 PSI MAXIMUM PRESSURE
- FIELD ADJUSTABLE
- +/- 2% REPEATABILITY
- 1/4 NPT CONNECTION
- UP TO 3A / 125 VAC SUPPLY
- N.O. OR N.C. CIRCUIT
- DIN CONNECTOR TYPE

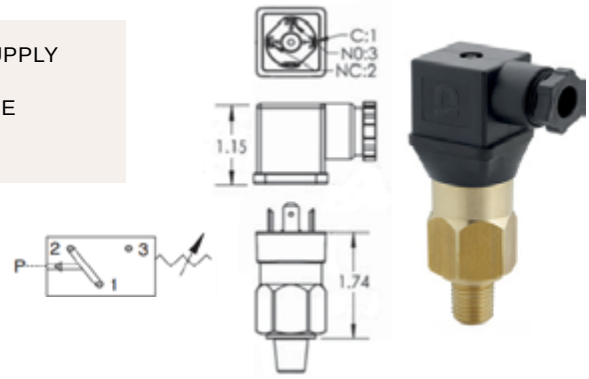

PART NUMBER	PSI RANGE	PSI DIFFERENTIAL
BPA-1-4M-C-HC	5 - 85	3 - 10
BPA-1A-4M-C-HC	65 - 300	8 - 30
BPA-3-4M-C-HC	300 - 2500	50 - 300
BPA-4-4M-C-HC	1000 - 6000	150 - 600
BPA-5-4M-C-HC	500 - 3500	75 - 300

VACUUM SWITCH

- 9000 PSI MAXIMUM PRESSURE
- FIELD ADJUSTABLE
- +/- 2% REPEATABILITY
- 1/4 NPT CONNECTION
- UP TO 3A / 125 VAC SUPPLY
- N.O. OR N.C. CIRCUIT
- DIN CONNECTOR TYPE
- 5-85 IN HG RANGE

PART NUMBER
BPA-1-4M-C-HC

PRESSURE TRANSDUCERS

- 8700 PSI MAXIMUM PRESSURE
- 4 - 20 MA SIGNAL OUTPUT (2 WIRE)
- 1/4 NPT CONNECTION
- +/- 0.5% REPEATABILITY

TDD MODEL
WITH LCD DISPLAY

INFORMATION ABOUT THE TDD MODEL WITH LCD DISPLAY
- DISPLAY IN REALTIME
- CAN BE SET IN DIFFERENT UNITS: KPA, MPA, BAR, PSI
- PROVIDE ADJUSTMENT TO ZERO AND SPAN CALIBRATION

PART NUMBER	PSI RANGE	VOLTAGE SUPPLY	CONNECTOR
XTC-A-0/3000-4M-HCM-81	0 - 3000	12-30 VDC	MINI DIN 43650C
XTC-A-0/6000-4M-HCM-81	0 - 6000		
TDD-A-0/3000-4M-M	0 - 3000	18-30 VDC	M12 - 3 PINS C/W 79" CABLE
TDD-A-0/6000-4M-M	0 - 6000		

ALSO AVAILABLE

- DIFFERENT PORTS AND ADJUSTMENT RANGE
- OTHER OUTPUT SIGNALS & TYPE OF ELECTRICAL CONNECTORS
- FACTORY SET ADJUSTEMENT
- MANY OTHER MODELS FOR SPECIFIC APPLICATIONS
- DIFFERENTIAL PRESSURE SWITCH
- TEMPERATURE SWITCH & TRANSDUCER

PRESSURE GAUGES

- 2 1/2" & 4" ROUND FACE
- PRESSURE RANGE FROM 0-600 TO 0-10000
- GLYCERIN FILLED
- 1/4 NPT CONNECTION ON THE 2 1/2" FACE
- 1/2 NPT CONNECTION ON THE 4" FACE
- BOTTOM STEM AND BACK MOUNT AVAILABLE

MODEL CODE

CPG - □P - □□□□ - □ - N

- DIAMETER
- PSI RANGE
- MOUNT TYPE

GAUGE DIAMETER	
INCH	CODE
2.5"	1
4"	2

MOUNT TYPE	
TYPE	CODE
BOTTOM STEM	A
BACK STEM	D

PRESSURE RANGE	
PSI RANGE	CODE
0-600	600
0-1000	1000
0-2000	2000
0-3000	3000
0-5000	5000
0-6000	6000
0-10000	10K

DIGITAL PRESSURE GAUGES

	HC	STAUFF
DISPLAY MEASURED VALUES (MIN & MAX)	✓	✓
RUBBER PROTECTIVE COVERING		✓
UNITS: BAR, PSI, MPA, KPA	✓	✓
0-5800 PSI	✓	✓
0-12000 PSI (12K)	✓	
RESET BUTTON	✓	✓
BACKGROUND LIGHTNING	✓	✓
ACCURACY OR 0.5% OF FULL SCALE	✓	✓
SAE 04 CONNECTION		✓
NPT 1/4 CONNECTION	✓	
WIRELESS AVAILABLE	✓	✓

PART NUMBER : CDPG - IP 12K A-N
CDPG - IP 5000 A-N

PART NUMBER: SPG-DIGI-B0400-U

GAUGES / ACCESSORIES

PART NUMBER	DESCRIPTION	DIMENSION (IN)
CPMB - 1 P	PANEL BACKMOUNT	2,5"
CPMB - 2P		4"
SNUBBER 1/2 NPT	SNUBBER	0,5"
SNUBBER 1/4 NPT		0,25"
CPG IP - 30V - 100 - D - N	CENTER BACKMOUNT	-

PANEL BACKMOUNT

CENTER BACKMOUNT

SNUBBER

J.I.C. TANKS

EACH STYLE T1 TANK INCLUDES:

- OIL LEVEL & TEMP. GAUGE HOLES
- FILLER BREATHER RISER
- 2 STEEL END-COVERS WITH GASKETS
- BAFFLE WITH CUTOUTS FOR CIRCULATION
- 3/4" SAE DRAIN IN END COVER
- EXTERIOR OF TANK PRIME PAINTED
- INTERIOR OF TANK COATED WITH RUST PREVENTIVE OIL

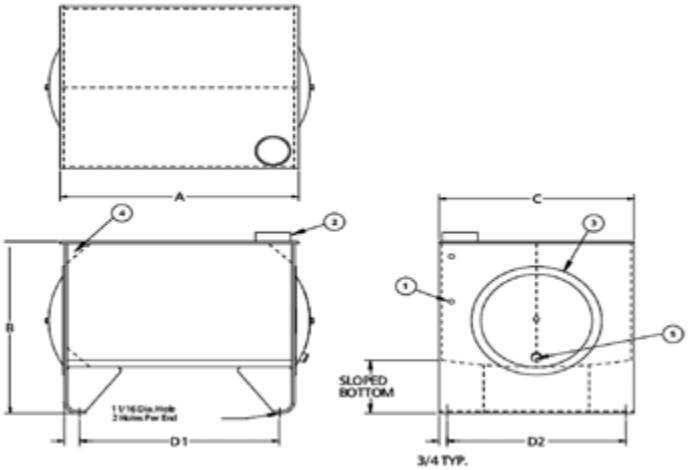

CAPACITY GALLONS	PART NUMBER	TANK DIMENSIONS (INCHES)						MATERIAL THICKNESS		SHIPPING WEIGHT LBS
		A LENGTH	B HEIGHT	C WIDTH	MOUNTING CENTERS		END COVER	END	TOP	
					D1±1/8	D2±1/8				
10	T1.10	22"	19 3/8"	18"	18 1/4"	16 1/2"	12"	7 GA	7 GA	105
15	T1.15	26"	19 3/8"	18"	22 1/4"	16 1/2"	12"	7 GA	7 GA	105
20	T1.20	30"	19 3/8"	18"	26 1/4"	16 1/2"	12"	7 GA	7 GA	125
30	T1.30	36"	19 3/8"	24"	32 1/4"	22 1/2"	12"	7 GA	7 GA	178
40	T1.40	36"	21"	24"	32 1/4"	22 1/2"	12"	7 GA	7 GA	190
50	T1.50	36"	23"	24"	32 1/4"	22 1/2"	16"	7 GA	7 GA	200
60	T1.60	48"	20 11/16"	27"	44 1/4"	25 1/2"	16"	7 GA	3/8"	314
80	T1.80	60"	21 1/2"	27"	56 1/4"	25 1/2"	16"	7 GA	3/8"	398
100	T1.100	60"	23 1/2"	27"	56 1/4"	25 1/2"	16"	7 GA	3/8"	418

VERTICAL NON-J.I.C. TANKS

TV TANK INCLUDES:

- OIL LEVEL & TEMP. GAUGE MOUNTING HOLES
- 4 COVER MOUNTING BOLTS
- CHANNEL GASKET FOR COVER PLATE
- 3/4" SAE DRAIN
- OUTSIDE OF TANK PRIME PAINTED
- INTERIOR OF TANK COATED WITH RUST PREVENTIVE OIL

TOP COVER MUST BE ORDERED SEPARATELY.
PLEASE SPECIFY YOUR NEEDS.

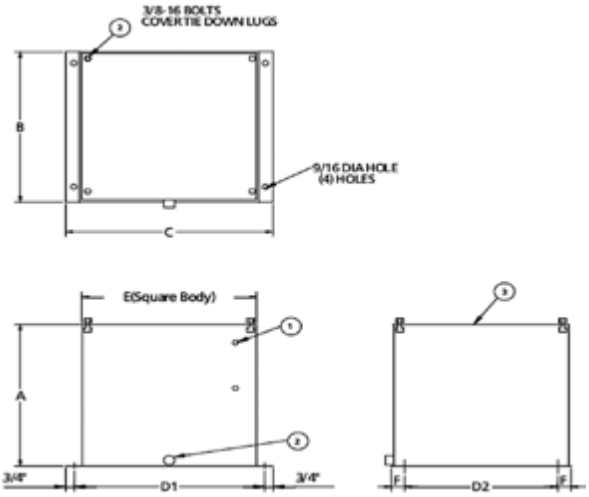

CAPACITY GALLONS	PART NUMBER	TANK DIMENSIONS (INCHES)							SHIPPING WEIGHT LBS
		A	B	C	MOUNTING CENTERS		E	F	
					D1±1/8	D2±1/8			
5	TV-172	10"	12 1/2"	14 1/2"	13 1/2"	10"	12"	1/2"	55
10	TV-173	15 1/2"	17 1/2"	20"	18 3/4"	15"	17"	1 1/4"	65
20	TV-174	18 1/2"	18"	20 1/2"	19 1/4"	15"	17 1/2"	1 1/2"	80
30	TV-175	26 1/2"	18"	20 1/2"	19 1/4"	15"	17 1/2"	1 1/2"	100

Download brochure

https://www.padoan.it/documents/NA/Padoan_NA_brochure.pdf

Standard and customized tanks
In this brochure Padoan presents the "N" tanks, the standard solutions available for our clients. Our R&D dept. is at your disposal to find the best solution to fit your needs with customized products.
Feel free to contact us at info@padoan.it.

Go to our online configurator to find the best solution for you

https://www.padoan.it/en/north-america-configurator/

All rights reserved to Padoan srl. It is not allowed any kind of copy or use of information or pictures contained in this brochure.

Pictures and descriptions provided for our products are not to scale and are intended for illustrative purposes only.

Padoan is not responsible for any mistake or inaccuracy.

The Company reserves the right to change the technical features of the products without prior notice.

our point of view

Family company since 1937, we are **manufacturer of oil, diesel-oil and combined tanks/reservoirs** for industrial vehicles and machineries.

With a strong focus on R&D, technology and support to our clients, the mission is translated into action by the **Italian headquarter and by the 3 subsidiary companies** in Switzerland, Germany and Chile.

Our know-how allows us to provide the right **solution to bodybuilders, OEMs and distribution networks** too.

The I**talian design and quality markout our wide range of hydraulic tanks/reservoirs specifically designed for North America**.

Quality, innovation, r&d are keystones of our success in more than 50 Countries in the world.

Our mission and vision can be expressed by our claim: **WETANKYOU since 1937**.

We want to be a partner more than a supplier, working by our clients' side and reaching their goals, that is the reason why every day we ThANK our clients who trust us as a partner to develop their projects and strategies.

At the same time whe ThANK our team, more than 200 people in the world who, from more than 80 years, provides the quality and value we share with you.

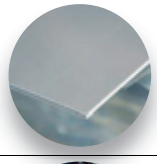

RAW MATERIAL USED IN AUTOMOTIVE FIELD
The material we use guarantees resistance, finishing, longer life expectancy, high quality perception to create premium products.

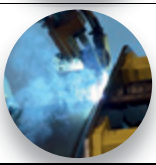

AUTOMATIZED WELDING PROCESS
For several years our welding process has been carried out by automatized robots, through the adoption of the MIG/MAG technology.
This allows a better internal cleaning avoiding the contamination normally caused by manual or standard welding.

PAINTING PROCESS WITH PRIMER TREATMENT
The painted steel tanks are finished with an epoxy powder varnishing (from 110 to 180 μ) to guarantee the protection from aggressive agents. Primer is also applied for further protection. Each tank is also tested through a salt spray process lasting 500 hours.

RELIABILITY TEST WITH CRACK TESTING MACHINE
All of our tanks components, including brackets and straps, are tested with our cracking vibration machine to verify the life expectancy and quality of our products.

QUALITY TEST 1:1 WITH LEAK DETECTOR
Every tank is tested through an automatized machinery to verify any microscopic loss, using helium technology.
Every tank is marked with a label to indicate it has been tested and approved.

Download tech. details

26/36
This oil tank is equipped with sight temperature gauge
Welded mounting kit: saddlemount installation only (included).
https://www.padoan.it/documents/NA/Padoan_NA_OIL_26-36.pdf

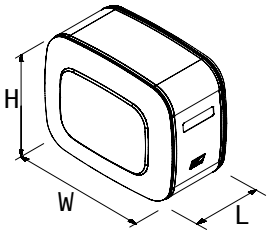

26/36 (sidewalls 10.2” h x 14.2” w)

Products range	Filter Flange	Level Indicator L = Level gauge	Returns	Valve Plate	Mounting kit	Suction Connection	GAL*	Dimensions (in) L x H x W	Material	Product Code NSOF = Steel
Multi Function (MF)	● embossed 135	● L	●	●	● Saddle-mount	1” 1/4 NPT	8 11 13	14.4x10.2x14.2 18.3x10.2x14.2 22,3x10.2x14.2	F F F	- 0030036US00 - 0040046US00 - 0050056US00

* Full tank capacity ● included ○ predisposed (not incl) ● not included in the standard tanks

Download tech. details

36/26
This oil tank is equipped with sight temperature gauge
Welded mounting kit: upright installation only (included).
https://www.padoan.it/documents/NA/Padoan_NA_OIL_36-26.pdf

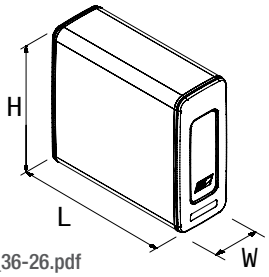

Products range	Filter Flange	Level Indicator L = Level gauge	Returns	Valve Plate	Mounting kit	Suction Connection	Gal*	Dimension [in] L x H x W	Material	Product Code NSOF = Steel
Multi Function (MF)	● embossed 135	● L	●	●	● Upright	1” 1/4 NPT	8 11 13	14.4x14.2x10.2 18.3x14.2x10.2 22.3x14.2x10.2	F F F	- 0030036US01 - 0040046US01 - 0050056US01

* Full tank capacity ● included ○ predisposed (not incl) ● not included in the standard tanks

Download tech. details

44/54
This oil tank is equipped with sight temperature gauge
Mounting kit: available for saddlemount and upright installation.
https://www.padoan.it/documents/NA/Padoan_NA_OIL_44-54.pdf

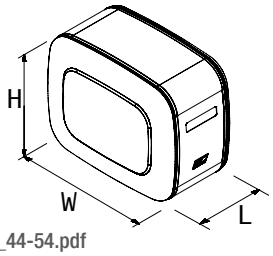

44/54 (sidewalls 17.3” h x 21.3” w)

Products range	Filter Flange	Level Indicator L = Level gauge	Returns	Valve Plate	Mounting kit	Suction Connection	GAL*	Dimensions (in) L x H x W	Material	Product Code NSOF = Steel NSOA = Aluminium
Multi Function (MF)	● embossed 135	● L	● 1” 1/4 NPT	●	● Saddel-mount/ Upright	1” 1/2 NPT	18	13.8x17.6x21.5	A/F	- 0070035US00

* Full tank capacity ● included ○ predisposed (not incl) ● not included in the standard tanks

Download tech. details

50/64
This oil tank is equipped with sight temperature gauge
Mounting kit: available for saddlemount and upright installation.
https://www.padoan.it/documents/NA/Padoan_NA_OIL_50-64.pdf

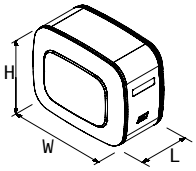

50/64 (sidewalls 20” h x 25,1” w)

Products range	Filter Flange	Level Indicator L = Level gauge	Returns	Valve Plate	Mounting kit	Suction Connection	GAL*	Dimensions (in) L x H x W	Material	Product Code NSOF = Steel NSOA = Aluminium
Multi Function (MF)	● embossed 135	● L	● 1” 1/4 NPT	●	● Saddelmount/ Upright	1” 1/2 NPT	28	15,7x20x25,1	F	- 0100040US00
							32	17,7x20x25,1	F	- 0120045US00
							40	21,6x20x25,1	A/F	- 0150055US00

* Full tank capacity ● included ○ predisposed (not incl) ● not included in the standard tanks

Download tech. details

63/70
This oil tank is equipped with sight temperature gauge
Mounting kit: available for saddlemount and upright installation.
https://www.padoan.it/documents/NA/Padoan_NA_OIL_63-70.pdf

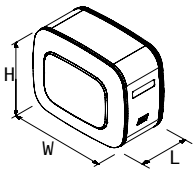

63/70 (sidewalls 25,1” h x 27,9” w)

Products range	Filter Flange	Level Indicator L = Level gauge	Returns	Valve Plate	Mounting kit	Suction Connection	GAL*	Dimensions (in) L x H x W	Material	Product Code NSOF = Steel NSOA = Aluminium
Multi Function (MF)	● embossed 135	● L	● 1” 1/4 NPT	●	● Saddlemount	1” 1/2 NPT	35	13,7x25,1x27,9	A	- 0135035US00
	● welded 195				● Saddlemount/ Upright	2” NPT	51	19,7x25,1x27,9	A/F	- 0200050US00
							66	23,6x25,1x27,9	A	- 0250060US00
							80	28,9x25,1x27,9	A	- 0300073US00
			● 2”				106	39,4x25,1x27,9	A/F	- 0400100US00

* Full tank capacity ● included ○ predisposed (not incl) ● not included in the standard tanks

Download tech. details

64/50
This oil tank is equipped with sight temperature gauge.
Included a 3” to 2” oil suction connection adaptor
Mounting kit: shock absorber mounting kit with springs.
Upright installation only
https://www.padoan.it/documents/NA/Padoan_NA_OIL_64-50.pdf

Aluminium Painted Steel RAL 7021

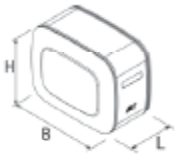

64/50 (sidewalls 25,1” h x 20” w)

Products range	Filter Flange	Level Indicator L = Sight temperature gauge	Returns	Valve Plate	Mounting kit	Suction Connection	GAL*	Dimensions [in] L x H x W	Material	Product Code NSOF = Steel NSOA = Aluminium
Multi Function (MF)	● 2 x embossed 135	● L	●	●	● Upright	3” NPT	75	39,4x25,1x20	A/F	- 0285100US00
						(2” NPT**)	100	51,2x25,1x20	A/F	- 0375130US00

* Full tank capacity ● included ○ predisposed (not incl) ● not included in the standard tanks
** NPT adaptor for suction connection, from 3” to 2”, included in the tanks

Download tech. details

63/27
This oil tank is equipped with sight temperature gauge
Mounting kit: upright installation only.
https://www.padoan.it/documents/NA/Padoan_NA_OIL_63-27.pdf

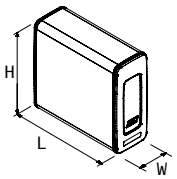

63/27 (sidewalls 25,1” h x 10,7” w)

Products range	Filter Flange	Level Indicator L = Level gauge	Returns	Valve Plate	Mounting kit	Suction Connection	GAL*	Dimensions (in) L x H x W	Material	Product Code NSOF = Steel NSOA = Aluminium
Multi Function (MF)	● embossed 135	● L	● 2” NPT	●	● Upright	2” NPT	53	49,7x25,1x10,7	A/F	- 0200126US00
	● welded 195						66	61,5x25,1x10,7	A	- 0250156US00

* Full tank capacity ● included ○ predisposed (not incl) ● not included in the standard tanks

Product images are for illustrative purposes only and might be different according to the actual product, accessories and mounting kit version

accessories

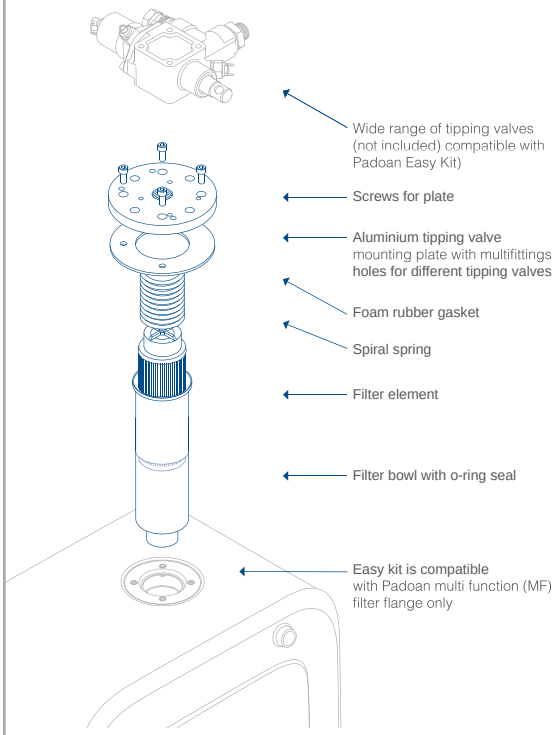

Download tech. details
https://www.padoan.it/documents/NA/Padoan_NA_OIL_Accessories.pdf

Air breather caps - oil tank

Description	Specifics	Product Code	Spare Parts-Cartridge
Plastic air breather cap with air filter, fixing screws and anti-splash	H 41 mm - air cartridge paper 10 µm	ATP0PLSCAR0LI01	AFA0CARCILTOP20
Metal Air Breather cap with air filter and fixing screws	air cartridge paper 10 µm	ATP0CAR0LILCHFL	

Immersed Easy Filter

Filter Flange	Flow rate l/min	Filtration mesh µm	Inlet connection	Product code	Spare part-Cartd
embossed 135	100 (26 gpm)	10	1" (NPT adaptor)	AF00IMM134103F1	AF00ELF142070F
	125 (33 gpm)	21	1" (NPT adaptor)	AF00IMM134103F2	AF00ELF142070F
	150 (40 gpm)	60	1" (NPT adaptor)	AF00IMM134103ST	AF00ELF142070R

accessories

Semi-immersed Return filter

Filter Flange	Flow rate l/min	Filtration mesh µm	Inlet connection	Product code	Spare part-Cartdrige
embossed 135	125 (33 gpm)	21	1" NPT	AF00SEM135101F2	AF00ELF142070F2
	150 (40 gpm)	60	1" NPT	AF00SEM135101ST	AF00ELF142070RM

Immersed Easy Filter (26/36 and 36/26 excluded)

Filter Flange	Flow rate l/min	Filtration mesh µm	Inlet connection	Product code	Spare part-Cartdrige
embossed 135	150 (39 gpm)	10	1" (NPT adaptor)	AF00IMM134102F1	AF00ELF2055070F1
	180 (48 gpm)	21	1" (NPT adaptor)	AF00IMM134102F2	AF00ELF205070F2
	220 (58 gpm)	60	1" (NPT adaptor)	AF00IMM134102ST	AF00ELF205070RM

Semi-immersed Return filter (26/36 and 36/26 excluded)

Filter Flange	Flow rate l/min	Filtration mesh µm	Inlet connection	Product code	Spare part-Cartdrige
embossed 135	150 (39 gpm)	10	1" 1/4 NPT	AF00SEM137125F1	AF00ELF205070F1
	200 (53 gpm)	21	1" 1/4 NPT	AF00SEM137125F2	AF00ELF205070F2
	250 (66 gpm)	60	1" 1/4 NPT	AF00SEM137125RM	AF00ELF205070RM
welded 195	200 (53 gpm)	10	1" 1/4 NPT	AF00SEM196125F1	AF00ELF211099F1
	250 (66 gpm)	21	1" 1/4 NPT	AF00SEM196125F2	AF00ELF211099F2
	300 (79 rpm)	60	1" 1/4 NPT	AF00SEM196125CL	AF00ELF210100RM

Product images are for illustrative purposes only and might be different according to the actual product, accessories and mounting kit version

BAYONET FILLER BREATHERS

- ZINC PLATED CAP
- 160 GPM MAXIMUM FLOW
- 40 MICRONS (10 MICRONS AVAILABLE)
- STAINLESS STEEL BASKET (NYLON AVAILABLE)

PART NUMBER	DESCRIPTION
57XL-40	STANDARD MODEL
AS-57XL-40	57XL40 WITH ANTI-SPLASH
LC-57XL-40	57XL40 WITH LOCKING CAP
57XL-40-P5	57XL40 PRESSURIZED TO 5 PSI

METAL THREADED BREATHERS

- ZINC PLATED CAP
- 40 MICRONS (10 MICRONS AVAILABLE)

PART NUMBER	NPT THREAD	MAX GPM	DIMENSIONS		
			A	B	C
BF-4	1/4"	28	1.4"	1.9"	0.7"
BF-6	3/8"				
BF-8	1/2"	245	2.6"	2.9"	0.9"
BF-12	3/4"	280	2.6"	3"	1.1"
BF-12-16 **			3"	3.3"	1.4"
BF-16	1"	525			

** CAN BE PRESSURIZED TO 5 PSI. PART NO IS BF-12-16-P5

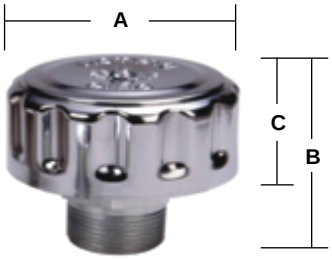

NYLON THREADED BREATHERS

- 40 MICRONS (10 MICRONS AVAILABLE)
- ANTI-SPLASH & DIPSTICK OPTIONS ARE AVAILABLE

PART NUMBER	NPT THREAD	DIMENSIONS			
		A	B	C	D
NY-4	1/4"	1.2"	1.4"	0.8"	0.6"
NY-6	3/8"				
NY-8	1/2"	1.6"			
AS-NY-8	1/2" ANTI-SPLASH				
NY-12	3/4"	1.8"	1.5"	0.9"	0.6"
NY-7-12		2.8"	2"	1.4"	0.7"
AS-NY-7-12	3/4" ANTI-SPLASH				
NY-16	1"	1.8"	1.5"	0.9"	0.6"
NY-7-16		2.8"	2.1"	1.4"	0.7"
NY-7-20	1 1/4"	2.8"	2.2"	1.4"	0.8"
AS-NY-7-20-DIP5"	1 1/4" 5" DIPSTICK + ANTI-SPLASH				

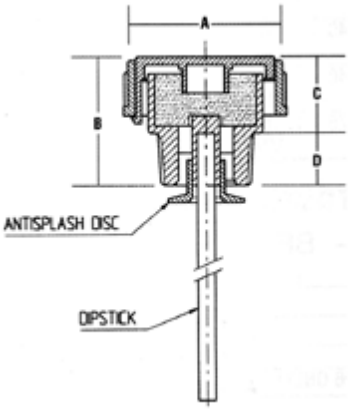

PUSH ON BREATHERS

- 40 MICRONS
- CLIPS ON A 1.5" TUBE

PART NUMBER: NYPO-24

WELD-ON FILLER-BREATHERS

- 40 MICRONS
- 2.38" TUBE TO WELD ON TANK

PART NUMBER: FB-18

SPIN-ON BREATHERS

- 10 MICRONS PAPER (MANY OPTIONS AVAILABLE)

PART NUMBER	NPT THREAD	MAX CFM	SPARE ELEMENT	ADAPTOR ONLY
LGB-8-10	1/2"	100	CP-752-10	LABA-8
LGB-12-16	1"	40	CPAB310	LABA-12-16
LGB-12-10	3/4"	150	CP-752-10	LABA-12
LGB-16-10	1"	200		LABA-16
LGB-20-10	1 1/4"	250	CP-1282-10	LABA-20
LGB-B-310	BAYONET	40	CP-AB-310	B12

DESICCANT BREATHERS

- 2 MICRONS RATING
- ABSORB WATER VAPOR
- SILICA GEL TURNS FROM GOLD TO GREEN WHEN MAXIMUM ABSORPTION IS REACHED

PART NUMBER	MAX GPM	MAX H20 CAPACITY	DIM "A"
DB-03	262	100 ML	3.5"
DB-05		200 ML	5"
DB-08		425 ML	8"
DB-10	750	575 ML	10"

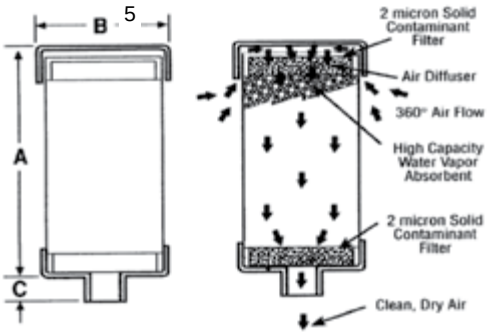

DESICCANT BREATHER ADAPTORS

- ADAPT DESICCANT BREATHER TO TANK

PART NUMBER	DESCRIPTION
DB-BA	BAYONET
DB-R1	1" NPT
DB-R2	3/4" NPT
DB-R3	1/2" NPT

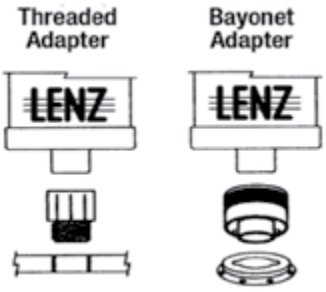

LEVEL GAUGES

- OIL INDICATOR WITH THERMOMETER
- AVAILABLE WITH METRIC BOLT THREAD

PART NUMBER	DIMENSIONS			THREAD
	I	H1	H2	
T-LLG-3	3.0"	4.2"	1.2"	1/2-13 UNC
T-LLG-5	5.0"	6.1"		
T-LLG-10	10.0"	11.1"	1.3"	

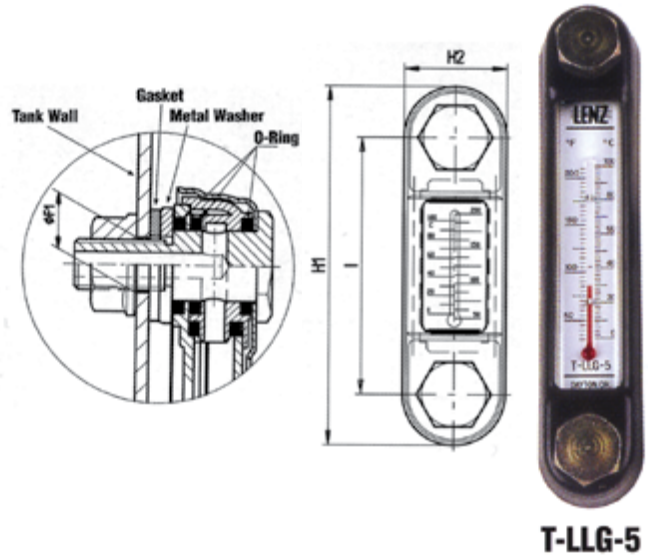

T-LLG-5

SIGHT WINDOWS

- INDICATE LIQUID LEVEL IN RESERVOIR
- SAE-THREAD AND REFLECTOR BALL IN OPTION

PART NUMBER	THREAD
LSW-6	3/8 NPT
LSW-8	1/2 NPT
LSW-12	3/4 NPT
LSW-16	1 NPT
LSW-20	1 1/4 NPT
LSW-24	1 1/2 NPT
LSW-32	2 NPT

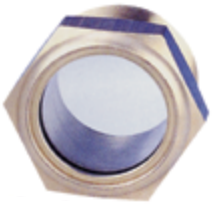

TANK COVERS

- GIVES ACCESS TO INSIDE OF RESERVOIR
- MADE IN STEEL ZINC PLATED
- NO-LEAK GASKET
- DRAIN IN OPTION

PART NUMBER	DIM "A"
TC-6	6"
TC-12	12"
TC-14	14"
TC-18	18"

BAFFLE ADAPTOR (TC-BA) MUST BE ORDERED SEPARATELY

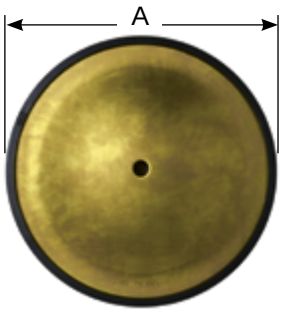

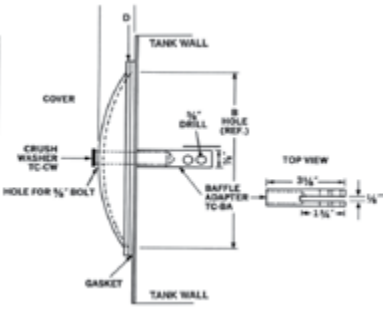

MAGNETIC DRAIN PLUGS

- ATTRACTS FERROUS PARTICLES

PART NUMBER	THREAD
MDP-6	3/8 NPT
MDP-8	1/2 NPT
MDP-12	3/4 NPT
MDP-16	1 NPT

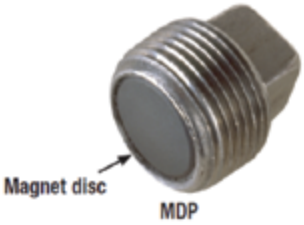

ALSO AVAILABLE

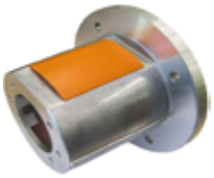

ELECTRIC MOTORS

MOTOR FRAME	PUMP FLANGE	FACE TO FACE	PART NO
56-145TC	4F17 1.781" - 4 BOLT	4.25"	B564F42
	SAE AA 2" - 2 BOLT	3.50"	B56AA35
		4.25"	B56AA42
	SAE A 3 1/4" - 2 BOLT	3.50"	B56A35
		4.25"	B56A42
182-256TC	SAE A 3 1/4" - 2 BOLT	5.00"	B182A50
		5.81"	B182A58
		6.81"	B182A68
	SAE B 4" - 2 BOLT	5.81"	B182B58
		6.81"	B182B68
284-286TC	SAE B 4" - 2/4 BOLT	6.87"	B284B68
		7.87"	B284B78

TECHNICAL INFORMATION ON ELECTRICAL MOTORS					
HP	FRAME	SHAFT DIMENSIONS			TORQUE (LB-IN)
		DIAMETER	KEY	LENGTH	
1	143TC	7/8	3/16	2.25"	35
1.5	145TC				52
2					70
3	182TC	1 1/8	1/4	2.75"	105
5	184TC				175
7.5	213TC	1 3/8	5/16	3.38"	262
10	215TC				350
15	254TC	1 5/8	3/8	4.00"	525
20	256TC				700
25	284TC	1 7/8	1/2	4.63"	875
30	286TC				

BASED ON TEFC MOTORS @ 1800 RPM

GAS ENGINE

HP	PUMP FLANGE	FACE TO FACE	PART NUMBER
5.5 & 6.5	4F17 1.781" - 4 BOLT	4.63"	ADAP55-175
	SAE AA 2" - 2 BOLT	4.63"	ADAP55-200
8 TO 20	4F17 1.781" - 4 BOLT	5.50"	ADAP90200-175B
		6.0"	ADAP90200-L-175
	SAE AA 2" - 2 BOLT	5.50"	ADAP90200-200
	SAE A 3 1/4" - 2 BOLT	5.50"	ADAP90200-C-325
		6.00"	ADAP90200-L-325

TECHNICAL INFORMATION ON GAS ENGINE MOTORS				
HP	SHAFT DIMENSIONS			TORQUE (LB-IN)
	DIAMETER	KEY	LENGTH	
5.5	3/4	3/16	2.42"	100
6.5				118
8	1	1/4	3.48"	146
9				164
11				200
13				237

BASED ON STD GAS ENGINE @ 3540 RPM

PUMP

TECHNICAL INFORMATION ON PUMP SHAFTS		
SHAFT TYPE	DIAMETER	LENGTH
SAE-AA - 4 BOLT	1/2	1.50"
SAE-AA - 2 BOLT	1/2	1.06"
SAE-A	5/8	1.25"
SAE-A	3/4	1.25"
SAE-B	7/8	1.61"
SAE-BB	1	1.81"

COUPLINGS

COUPLING SIZE	MAXIMUM BORE	RATED TORQUE (LBF.IN) SPIDER MATERIAL			DIMENSIONS (INCHES)			
		NITRILE	URETHANE	HYTREL	OD	OAL	G	LTB
L075	7/8	90	135	227	1.75	2.13	0.50	0.82
L095	1 1/8	194	291	561	2.11	2.51	0.52	1.00
L100	1 3/8	417	626	1137	2.54	3.48	0.71	1.38
L110	1 5/8	792	1188	2268	3.32	4.22	0.88	1.68
L150	1 7/8	1240	1660	3708	3.75	4.50	1.00	1.75

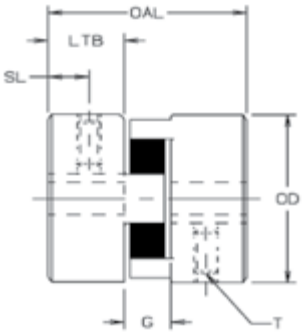

COUPLING PART NUMBERS				
L075-1/2	L095-1/2	L100-1/2		
L075-5/8	L095-5/8	L100-5/8	L110-5/8	L150-5/8
L075-3/4	L095-3/4	L100-3/4	L110-3/4	L150-3/4
L075-7/8	L095-7/8	L100-7/8	L110-7/8	L150-7/8
	L095-1	L100-1	L110-1	L150-1
	L095-1 1/8	L100-1 1/8	L110-1 1/8	L150-1 1/8
		L100 1 3/8	L110-1 3/8	L150-1 3/8
			L110-1 5/8	L150-1 5/8
				L150-1 7/8

INSERT PART NUMBERS SPIDER MATERIAL		
NITRILE	URETHANE	HYTREL
L075N	L075U	L075H
L095N	L095U	L095H
L100N	L100U	L100H
L110N	L110U	L110H
L150N	L150U	L150H

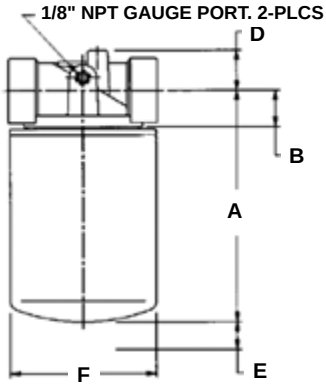

CP-1500 SERIES

CP-1520 SERIES

PART NUMBER	PORTS	POST THREAD	MAX GPM	MAX PSI	A	B	C	F
CP380	3/8 NPT	3/4" - 16 UNF	7	200	3.9	0.6	0.4	3.1
CP750	3/4 NPT	1" - 12 UNF	25	200	6.2	1.1	0.8	3.7
CP1000	1" NPT	1" - 12 UNF	25	200	6.2	1.1	0.8	3.7
CP1280	1 1/4 NPT	1 1/2 -16 UNF	60	150	8.1	1.2	1.2	5
CPL1280					12.2	1.2		
CP1500	1 1/2 NPT	1 1/2 -16 UNF	120	150	REFER TO LENZ CATALOG			
CP1520								

PORT	MICRONS	ASSEMBLY	HEAD	ELEMENT
3/8 NPT	10	CP380-1018	CP-380	CP-1018
	40	CP380-4018	-	CP-4018
3/4 NPT	10	CP752-10P	CP751-25	CP752-10
	25	CP752-30P	-	CP752-30
	140	-	-	CP752-100M
1" NPT	10	CP1010-10P	CP1011-R	CP752-10
	25	-	-	CP750-30
	140		-	CP752-100M
1 1/4 NPT	10	CP1280-10P	CP1281-25	CP1282-10
	25	CP1280-30P	-	CP1282-30
	140	-	-	CP1282-100M
	10		-	CPL1282-10
1 1/2 NPT	10	-	CP1501-25	CP1282-10 (2X)
	25			CP1282-30 (2X)
	10		CP1521-25	CP1282-10 (2X)
	25			CP1282-30 (2X)

MC-12
RETURN LINE INDICATING
GAUGE FOR 15 PSI FILTER
APPLICATIONS
2" MULTICOLOR
0-12 PSI GREEN
12-15 PSI YELLOW
15-60 PSI RED (SERVICE FILTER)

MC-20
RETURN LINE INDICATING
GAUGE FOR 25 PSI FILTER
APPLICATIONS
2" MULTICOLOR
0-20 PSI GREEN
21-24 PSI YELLOW
25-60 PSI RED (SERVICE FILTER)

PLEASE ADD "1&3" AFTER MODEL
CODE TO INSTALL A GAUGE

TANK TOP RETURN FILTER

- 100 PSI MAXIMUM WORKING PRESSURE
- 10 MICRONS PAPER MEDIA
- OTHER MICRONS AND MEDIA AVAILABLE

PART NUMBER	MAX GPM	THREAD	MEDIA
LIT-750-10P	25	3/4 NPT	10 MICRONS PAPER
LIT-1250-10P	80	1 1/4 NPT	
LITA-1250-10P	80	SAE 20	

SPARE ELEMENTS FOR LIT-750

PART NUMBER	MEDIA
LIT-752-10P	10 MICRONS PAPER
LIT-752-25P	25 MICRONS PAPER
LIT-752-10SYN	10 MICRONS SYNTHETIC

SPARE ELEMENTS FOR LIT-1250

PART NUMBER	MEDIA
LIT-1252-10P	10 MICRONS PAPER
LIT-1252-25P	25 MICRONS PAPER
LIT-1252-10SYN	10 MICRONS SYNTHETIC

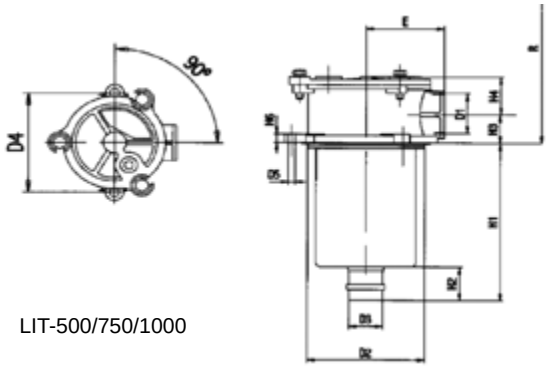

LIT-500/750/1000

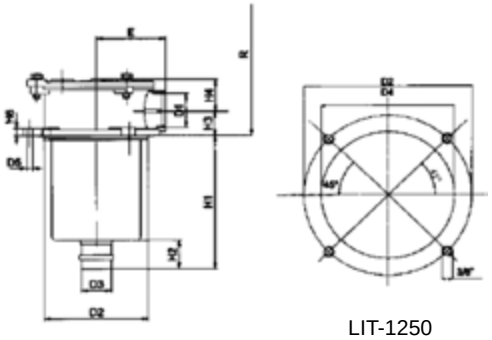

LIT-1250

MEDIUM PRESSURE FILTER

- 350 PSI MAXIMUM WORKING PRESSURE
- OTHER MICRONS AND MEDIA AVAILABLE

PART NUMBER	MAX GPM	THREAD	MEDIA
DH-750-800-RR	18	3/4 NPT	10 MICRONS PAPER
DH-1250-800-RR	45	1 1/4 NPT	
DH1500-800-RR		1 1/2 NPT	30 MICRONS PAPER
DH1500-400-RR	55	1 1/2 NPT	

SPARE ELEMENTS FOR DH-750 & DH-1000

PART NUMBER	MEDIA
8-03	10 MICRONS PAPER
4-03	30 MICRONS PAPER
5062-100	100 WIRE MESH

SPARE ELEMENTS FOR DH-1250 & DH-1500

PART NUMBER	MEDIA
8-15	10 MICRONS PAPER
4-15	30 MICRONS PAPER
5064-100	100 WIRE MESH

HIGH PRESSURE FILTER • TYPE SF

- 6000 PSI MAXIMUM WORKING PRESSURE
- 10 MICRONS SYNTHETIC MEDIA
- OTHER MICRONS AND MEDIA AVAILABLE

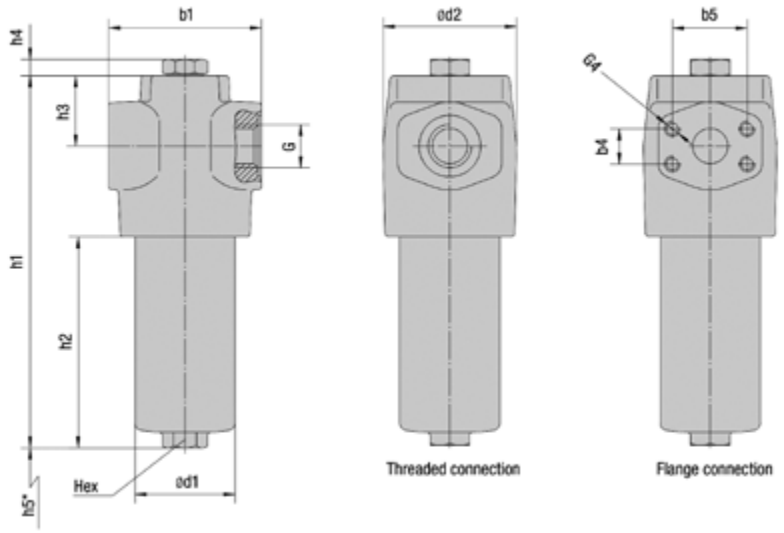

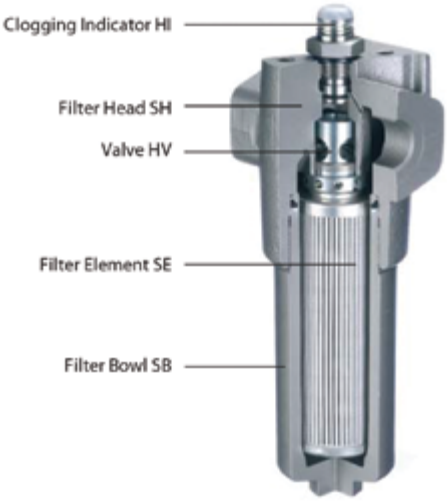

DIMENSIONS		FILTER SIZE SF			
		014	030	045	070
B1		4.10"	4.10"	5.04"	5.04"
D2		3.58"	3.58"	4.57"	4.57"
H3		1.89"	1.89"	1.95"	1.95"
H4		0.49"	0.49"	0.49"	0.49"
D1		2.68"	2.68"	3.74"	3.74"
H1		7.40"	10.00"	9.41"	11.73"
H2		3.07"	5.67"	4.06"	6.34"
H5	REC.	3.94"	6.69"	5.51"	7.87"
	MIN.	3.35"	3.35"	4.72"	4.72"
HEX		1.06"	1.06"	1.26"	1.26"

FILTER ASSEMBLY

HIGH PRESSURE FILTER HOUSINGS / COMPLETE FILTERS • TYPE SF			
PART NUMBER	FLOW	MAX GPM	SIZE
SF 014 G 10 B / T U / B / A	60 L/MIN	14	014
SF 030 G 10 B / T U / B / A	110 L/MIN	30	030
SF 045 G 10 B / T U / B / A	160 L/MIN	45	045
SF 070 G 10 B / T U / B / A	240 L/MIN	70	070

FILTER ELEMENTS • TYPE SE			
PART NUMBER	FLOW	MAX GPM	SIZE
SE 014 G 10 B / X	60 L/MIN	14	014
SE 030 G 10 B / X	110 L/MIN	30	030
SE 045 G 10 B / X	160 L/MIN	45	045
SE 070 G 10 B / X	240 L/MIN	70	070

CLOGGING INDICATORS

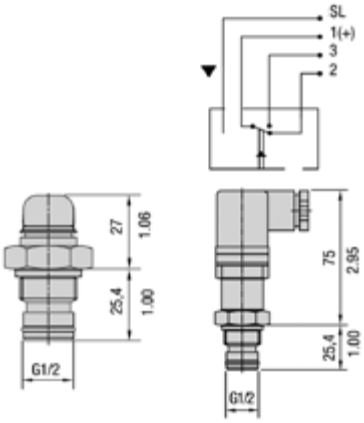

VISUAL
PART NO: HI-V

ELECTRIC
PART NO: HI-E

SUCTION STRAINERS

- PLATED STEEL PIPE NUT
- 100 MESH STAINLESS STEEL WIRE CLOTH
- OPTIONAL BY-PASS VALVE AVAILABLE
- EASILY CLEANABLE AND REUSABLE
- GOOD FOR MANY TYPE OF FLUID

PART NUMBER	MAX GPM	A	B	C	D
		NPT			
49-3	3	3/8"	1.2"	2.5"	1.9"
49-4	5	1/2"	1.9"	3.1"	2.6"
49-5	8	3/4"	2.9"	3.6"	2.6"
49-10	10	1"	4.6"	5.4"	2.6"
49-20	20	1 1/4"	6.1"	6.9"	3"
49-30	30	1 1/2"	7.2"	8"	3.3"
49-50	50	1 1/2"	9.1"	9.9"	3.9"
49-50-2	50	2"	9.1"	9.9"	3.9"
49-75	75	2 1/2"	9.1"	10.1"	5.1"
49-100	100	3"	10.4"	11.8"	5.1"

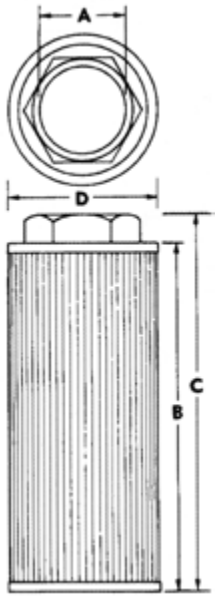

TANK MOUNT STRAINERS

- CAST IRON PIPE NUT
- 100 MESH STAINLESS STEEL WIRE CLOTH
- OPTIONAL BY-PASS VALVE AVAILABLE

PART NUMBER	MAX GPM	DIMENSIONS				
		NPT	NPT	C	D	E
		A	B			
LTM-3	3	3/4"	3/8"	4.0"	1.0"	0.9"
LTM-5	5	1"	1/2"	5.4"	1.1"	1.2"
LTM-10	10	1 1/4"	3/4"	8.2"	1.2"	1.4"
LTM-15	15	1 1/2"	1"	8.2"	1.2"	1.7"
LTM-25	25	2"	1 1/4"	9"	1.4"	2.1"
LTM-50	50	3"	2"	9.7"	1.7"	3"
LTM-100	100	4"	3"	11.3"	1.8"	4"

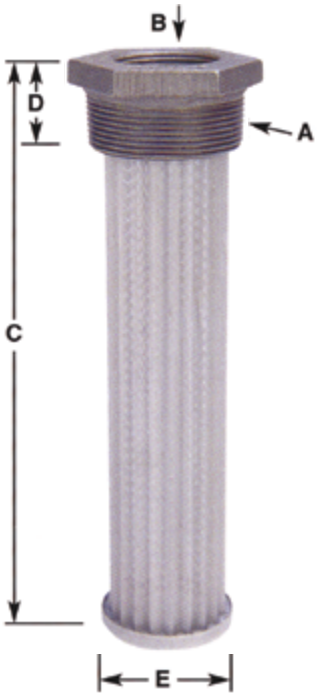

E•MC®
NORTH AMERICA

DEVOTED TO
PROVIDING GLOBAL AUTOMATION SOLUTIONS.

// Pneumatic Components & Systems

// Solenoid Valves

// Automation Solutions

COME VISIT US AT PNEUMATIC-EMC.COM

OUR MISSION IS FOR YOU **TO ACHIEVE YOUR GOALS** BY PROVIDING INNOVATIVE & QUALITY PRODUCTS.

E•MC®
NORTH AMERICA

www.pneumatic-emc.com

SLP SERIES

NORMAL OPEN

SLP H SMALL ORIFICE

SLP-HS1 SMALL ORIFICE

SLP H

SLP HS1

NORMAL CLOSE

SLP-08

SLP

SLP-S1

SLPF-S1

HOW TO ORDER

Series No.	Port Size	Original Status	—	Orifice	ID Code	Voltage	Valve Body Material	Seal Material	—	Thread Type
SLP: Thread connection SLPF: Flange connection	06: 1/8 " 08: 1/4 " 10: 3/8 " 15: 1/2 " 20: 3/4 " 25: 1 " 32: 1–1/4 " 40: 1–1/2 " 50: 2 "	Blank: NC H: NO		010: 1mm 015: 1.5mm 025: 2.5mm 030: 3mm 040: 4mm 105: 10.5mm 130: 13mm 200: 20mm 250: 25mm 320: 32mm 400: 40mm 500: 50mm 650: 65mm 800: 80mm 1000: 100mm	Blank: Standard type N: Low power type	E1: AC110V E2: AC220V E3: AC380V E4: DC24V E5: DC12V E6: AC36V E7: AC24V E8: DC110V E9: DC48V E10: DC36V	Blank: Brass S1: SS316	Blank: NBR E: EPDM V: VITON		Blank: G P: PT T: NPT

ORDER EXAMPLE:
SLP SERIES SOLENOID VALVE, 1/2 PORT SIZE, NC, 13MM ORIFICE, STANDARD TYPE, AC110V, BRASS VALVE BODY, NBR SEAL, G THREAD, ERP CODE IS: SLP15-130E1

EMCJ SERIES

HOW TO ORDER

Series No.	—	Port Size	—	Actuator Size	Acting Type	Valve Body Material	—	Thread Type
EMCJ: Stainless Steel Series Angle Valve		10: 3/8 " 15: 1/2 " 20: 3/4 " 25: 1 " 32: 1–1/4 " 40: 1–1/2 " 50: 2 "		40: Φ40mm 50: Φ50mm 63: Φ63mm 80: Φ80mm 100: Φ100mm	Blank: NC Single Acting H: NO Single Acting D: Double acting	S1: SS316 S2: SS304		Blank: G P: PT T: NPT

EMCJ SERIES FULL STAINLESS STEEL SERIES ANGLE VALVE

ORDER EXAMPLE:
EMCJ SERIES FULL STAINLESS STEEL ANGLE SEAT VALVE, 3/8 PORT SIZE, 40MM ACTUATOR SIZE, NC SINGLE ACTING, SS316 VALVE BODY, G THREAD, ERP CODE IS: EMCJ-10-40S1

EMCP SERIES

HOW TO ORDER

Series No .	—	Port Size	—	Actuator Size	Acting Type	Valve Body Material	—	Thread Type
EMCP： Polymer Actuator Angle Valve		15：1/2 " 20：3/4 " 25：1 " 32：1-1/4 " 40：1-1/2 " 50：2 "		50：Φ50mm 63：Φ63mm 80：Φ80mm 100：Φ100mm	Blank：NC Single Acting H: NO Single Acting D: Double acting	S1：SS316 S2：SS304		Blank：G P：PT T：NPT

EMCP POLYMER ACTUATOR SERIES ANGLE VALVE

ORDER EXAMPLE:
EMCP, ¾ PORT SIZE, 63 ACTUATOR SIZE, H NO SINGLE ACTING, S2 BODY MATERIAL, T NPT THREAD TYPE

THP SERIES 2/2 SOLENOID VALVE (STEAM VALVES)

THP-15TE2

THP-15TE2S2

HOW TO ORDER

Series No.	Port Size	Original Status	—Orifice	ID Code	Voltage	Valve Body Material	Connection Mode	Seal Material	—	Thread Type
THP Series	06: 1/8" 08: 1/4" 10: 3/8" 15: 1/2" 20: 3/4" 25: 1" 35: 1–1/4" 40: 1–1/2" 50: 2" 25F: 1" Flange 35F: 1–1/4" Flange 40F: 1–1/2" Flange 50F: 2" Flange	Blank: NC H: NO	2.5L: 2.5mm 4.5L: 4.5mm 15L: 15mm 35L: 35mm 45L: 45mm 20L: 20mm 25L: 25mm 35L: 35mm Cancel if with same port size	Blank: Standard type	E1: AC110V E2: AC220V E3: AC380V E4: DC24V E5: DC12V E6: AC36V E7: AC24V E8: DC110V E9: DC48V E10: DC36V	Blank: Brass S1: SS316 S2: SS304	Blank: DIN Connector F: Flying leads	Blank: NBR T: Teflon V: VITON E: EPDM		Blank: G P: PT T: NPT

ORDER EXAMPLE:
THP SERIES, 2 POSITION, 2 PORT, AC 110V, 1/8"PORT SIZE, ORIFICE: 2.5MM, BRASS, NORMAL CLOSE, NBR SEAL, DIN COIL, ERP CODE IS: THP06E1-2.5L

ESV SERIES 3/2 WAY DIRECT ACTING SOLENOID VALVE (NORMALY CLOSE)

HOW TO ORDER

Series No.	Control Style	—	Port Size	—	Orifice	ID Code	Voltage	Valve Body Material	Coil Type	Seal Material	—	Thread Type
ESV Series ESV–N Series energy–saving solenoid valve (Voltage: 8–30VDC, Power: 2–6W)	1: Normal Close 2: Normal Open 3: Universal Type		06: 1/8 " 08: 1/4 "		1.5L: 1.5mm 2L: 2mm 2.5L: 2.5mm 3L: 3mm 4L: 4mm 5L: 5mm	Blank: Standard type N: Energy saving type	E1: AC110V E2: AC220V E4: DC24V E5: DC12V E7: AC24V	Blank: Brass S2: SUS304	Blank: DIN Type F: Flying Leads	Blank: NBR E: EPDM V: VITON		Blank: G P: PT T: NPT

ORDER EXAMPLE:
ESV SERIES, 2 POSITION, 3 PORT, NORMAL CLOSE, AC110V,1/8" PORT SIZE, ORIFICE:1.5MM, BRASS VALVE BODY, NBR SEAL, THE ERP CODE IS: ESV1-06-1.5LE1

NBC SERIES NORTH AMERICAN STANDARD CYLINDER

NBC40×0200-S

HOW TO ORDER

Series No. — NB: Profile barrel (North American Standard)

Cushion Type — C: Air cushion

Type No. — Blank: Basic type; D: Double shaft type; J: Double shaft and adjustable type

Bore — 40(1-1/2"), 50(2"), 63(2-1/2"), 80(3-1/4"), 100(4")

X

Stroke — *Stroke length must be indicated as 4 digits. First and second digit:Stroke/Inch; Third and fourth digit:Stroke/Hundredth of an inch; Example) 0525=5.25(5–1/4) inch stroke; Details in stroke chart

–

Magnet No. — Blank: No magnet; S: With magnet

–

Seal Material — Blank: Standard material (NBR seal); V: VITON seal

–

Mounting Type — Blank: No; LB; CA; CB; FA; FB; YJ

ORDER EXAMPLE:
NBC SERIES, DOUBLE SHAFT AIR CYLINDER, BORE 40, STROKE 2 INCH, WITH MAGNET, NBR SEAL, CA MOUNTING ACCESSORY.
EPR CODE IS: NBCD40×0200-S-CA
NOTE: IF USING A CYLINDER WITH DIFFERENT MOUNTING ACCESSORIES, PLEASE USE THIS SEQUENTIAL CODING: LB/CA/CB/FA/FB/YJ

DIMENSION OF MOUNTING ACCESSORIES

NBC□–MSI

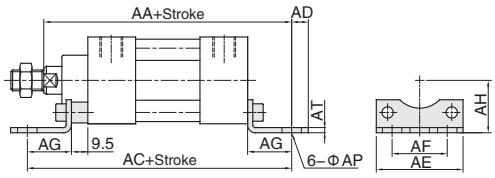

(inch)

Bore	AA	AC	AD	AE	AF	AG	AH	AP	AT
40(1–1/2")	5.625	6.00	0.38	1.97	1.25	1.00	1.188	0.44	0.12
50(2")	5.625	6.00	0.38	2.44	1.75	1.00	1.438	0.44	0.12
63(2–1/2")	5.75	6.125	0.38	2.95	2.25	1.00	1.625	0.44	0.12
80(3–1/4")	6.875	7.375	0.50	3.74	2.75	1.25	1.938	0.56	0.16
100(4")	6.875	7.375	0.50	4.41	3.50	1.25	2.25	0.56	0.16

NBC□–MF1

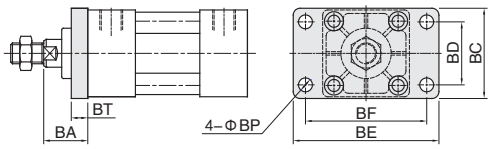

NBC□–MF2

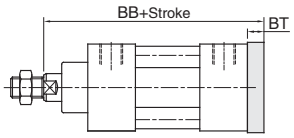

(inch)

Bore	BA	BB	BC	BD	BE	BF	BP	BT
40(1–1/2")	1.00	5.00	2.05	1.43	3.31	2.75	0.315	0.375
50(2")	1.00	5.00	2.56	1.84	4.13	3.375	0.375	0.375
63(2–1/2")	1.00	5.125	2.87	2.19	4.57	3.875	0.375	0.375
80(3–1/4")	1.375	6.25	3.62	2.76	5.63	4.685	0.435	0.63
100(4")	1.375	6.25	4.50	3.31	6.34	5.435	0.435	0.63

NBC□–MP2

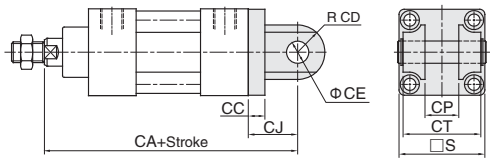

NBC□–MP4

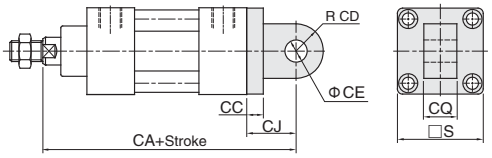

NBC□–YJ

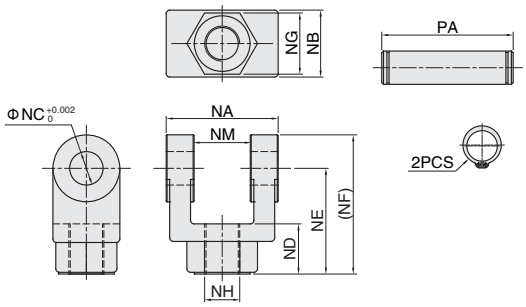

(inch)

Bore	CA	CC	CD	CE	CJ	CP	CQ	CT	S
40(1–1/2")	5.75	0.38	0.62	0.50	1.125	0.765	0.75	1.765	1.95
50(2")	5.75	0.38	0.62	0.50	1.125	0.765	0.75	1.765	2.42
63(2–1/2")	5.875	0.38	0.62	0.50	1.125	0.765	0.75	1.765	2.93
80(3–1/4")	7.50	0.63	0.87	0.75	1.875	1.265	1.25	2.515	3.66
100(4")	7.50	0.63	0.87	0.75	1.875	1.265	1.25	2.515	4.37

(inch)

Bore	NA	NB	NC	ND	NE	NF	NG	NH	NM	PA
40(1–1/2")	1.764	1.00	0.504	0.75	1.5	2.0	1.0	UNF–7/16–20–2A	0.764	2.17
50(2")	1.764	1.00	0.504	0.75	1.5	2.0	1.0	UNF–7/16–20–2A	0.764	2.17
63(2–1/2")	1.764	1.00	0.504	0.75	1.5	2.0	1.0	UNF–7/16–20–2A	0.764	2.17
80(3–1/4")	2.516	1.50	0.752	1.13	2.37	3.13	1.37	UNF 3/4–16–2A	1.264	2.95
100(4")	2.516	1.50	0.752	1.13	2.37	3.13	1.37	UNF 3/4–16–2A	1.264	2.95

E•MC NORTH AMERICA

FVBC SERIES ISO6431 / ISO15552

HOW TO ORDER

Series No. — Cushion Type — Type No. — Bore X Stroke — Adjustable Stroke — Magnet No. — Seal Material — Mounting Type — Thread Type

- Series No.: FVB: Square barrel; FXB: Profile barrel
- Cushion Type: C: Air cushion
- Type No.: Blank: Basic type; D: Double shaft type; J: Double shaft and adjustable stroke type
- Bore: 32, 40, 50, 63, 80, 100
- Stroke: 25, 50, 75, …
- Adjustable Stroke: 10, 20, 30, 40, 50, 75, 100
- Magnet No.: Blank: No magnet; S: With magnet
- Seal Material: Blank: TPU seal
- Mounting Type: Blank: No; CA, CB, CR, LB, FA, FB, IJ, YJ, YCJ, BJ, FD
- Thread Type: Blank: G; P: PT; T: NPT

ORDER EXAMPLE:
FVBC SERIES, DOUBLE SHAFT AIR CYLINDER, BORE 40MM, STROKE 50MM, WITH MAGNET, TPU SEAL MATERIAL, CA MOUNTING ACCESSORY, NPT THREAD.
ERP CODE IS: FVBCD 40X50-S-CA-T
NOTE: IF USING A CYLINDER WITH DIFFERENT MOUNTING ACCESSORIES, PLEASE USE THIS SEQUENTIAL CODING: CA/CB/CR/LB/FA/FB/IJ/YJ/BJ/FD

DIMENSION OF MOUNTING ACCESSORIES

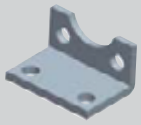

Dimension of LB type

Model\Sign	AA	AC	AD	AE	AF	AG	AH	AP	AT
FJ–VBC32LB	158	142	8	47	32	24	32	7	4
FJ–VBC40LB	179	161	9	53	36	28	36	9	4
FJ–VBC50LB	190	170	10	65	45	32	45	9	5
FJ–VBC63LB	209	185	12	75	50	32	50	9	5
FJ–VBC80LB	248	210	19	95	63	41	63	12.5	6
FJ–VBC100LB	258	220	19	115	75	41	71	14.5	6

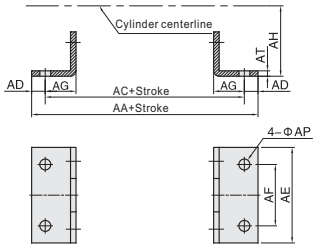

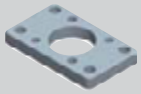

Dimension of FA/FB type

Model\Sign	AJ	AK	BA	BB	BC	BD	BE	BF	BH	BP	T
FJ–VBC32FA	11	7	30.5	10	47	32	80	64	6	7	32.5
FJ–VBC40FA	11	7	35.5	10	53	36	90	72	6	9	38
FJ–VBC50FA	14	9	40.5	12	65	45	110	90	8	9	46.5
FJ–VBC63FA	14	9	45.5	12	75	50	125	100	8	9	56.5
FJ–VBC80FA	17	11	45.5	16	95	63	154	126	10	12.5	72
FJ–VBC100FA	17	11	55.5	16	115	75	186	150	10	14.5	89

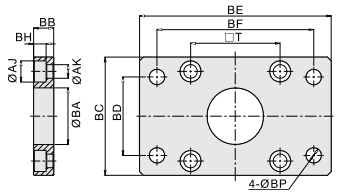

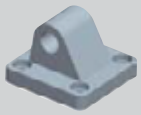

Dimension of CA type

Model\Sign	DA	DC	DE	DJ	DP	DQ	DZ	S	T
FJ–VBC32CA	31	22	10	9.5	7	25.8	5.5	47	32.5
FJ–VBC40CA	37	25	12	9.5	7	27.8	5.5	53	38
FJ–VBC50CA	39	27	12	10.5	9	31.8	6.5	65	46.5
FJ–VBC63CA	47	32	16	10.5	9	39.7	6.5	75	56.5
FJ–VBC80CA	51	36	16	14.5	11	49.7	10	95	72
FJ–VBC100CA	61	41	20	14.5	11	59.7	10	115	89

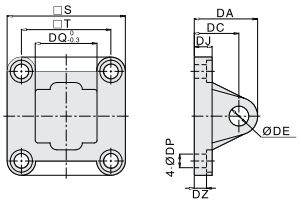

Dimension of CB type

Model\Sign	DA	DC	DE	DJ	DP	DQ	DT	DZ	S	T
FJ–VBC32CB	31	22	10	9.5	7	$26^{+0.52}_{0}$	45	5.5	47	32.5
FJ–VBC40CB	37	25	12	9.5	7	$28^{+0.52}_{0}$	52	5.5	53	38
FJ–VBC50CB	39	27	12	10.5	9	$32^{+0.62}_{0}$	60	6.5	65	46.5
FJ–VBC63CB	47	32	16	10.5	9	$40^{+0.62}_{0}$	70	6.5	75	56.5
FJ–VBC80CB	51	36	16	14.5	11	$50^{+0.62}_{0}$	90	10	95	72
FJ–VBC100CB	61	41	20	14.5	11	$60^{+0.74}_{0}$	110	10	115	89

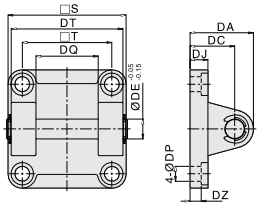

Dimensions of CR type

Model\Sign	DC	DD	DE	DF	DJ	DQ	DM	DN	S	T
FJ–VBC32CR	32	10	10	21	8	25.8	31	18	51	38
FJ–VBC40CR	36	11	12	24	10	27.8	35	22	54	41
FJ–VBC50CR	45	13	12	33	12	31.8	45	30	65	50
FJ–VBC63CR	50	15	16	37	12	39.7	50	35	67	52
FJ–VBC80CR	63	15	16	47	14	49.7	60	40	86	66
FJ–VBC100CR	71	19	20	55	15	59.7	70	50	96	76

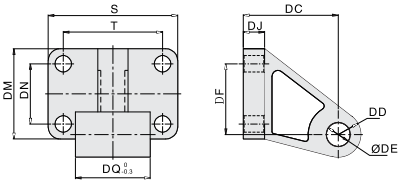

NCM SERIES NORTH AMERICAN STANDARD THROW-AWAY CYLINDER

NCM25×0500-S

HOW TO ORDER

Series No: NCM *(North American Standard)

Cushion Type: Blank: Rubber cushion

Type No: Blank: Basic type; D: Double shaft type

Bore: 16(9/16"), 20(3/4"), 25(1–1/16"), 32(1–1/4"), 40(1–1/2")

X

Stroke: *Stroke length must be indicated as 4 digits. First and second digit:Stroke/Inch. Third and fourth digit:Stroke/Hundredth of an inch. Example) 0525=5.25(5–1/4) inch stroke. Details in stroke chart

–

Magnet No: S: With magnet

–

Tail Type: Blank: Swiveling tail; R: Axial air–in

–

Mounting Type: Blank: No; LB; SDB; YJ

ORDER EXAMPLE:
NCM SERIES, DOUBLE SHAFT TYPE, BORE 32 MM, STROKE 2 INCH, WITH MAGNET, NO MOUNTING TYPE, SWIVELING TAIL.
ERP CODE IS: NCMD32×0200-S
NOTE: IF USING A CYLINDER WITH DIFFERENT MOUNTING ACCESSORIES, PLEASE USE THIS SEQUENTIAL CODING: LB/SDB/YJ

EG SERIES REPAIRABLE CYLINDER

HOW TO ORDER

Series No: EG

Type No: Blank: Basic type; D: Double shaft type; C: Air cushion type

Bore: 20, 25, 32, 40, 50, 63

X

Stroke: 20, 50, 75, 100, …

–

Magnet No: Blank: No magnet; S: With magnet

–

Piston Rod Thread Type: Blank: Female thread; M: Male thread; N: No thread

–

Mounting Type: Blank: No; LB; FA; FB; CB; SDB

–

Thread Type: Blank: G; P: PT

ORDER EXAMPLE:
EG SERIES BASIC TYPE CYLINDER, 25MM BORE, 50MM STROKE, WITH MAGNET, MALE THREAD ON PISTON ROD, CB MOUNTING ACCESSORY,G THREAD.
ERP CODE IS: EG25X50-S-M-CB

* Also available in NEG series (North american standard)

SQ SERIES COMPACT CYLINDER

HOW TO ORDER

Series No: SQ

Mounting Type: Blank: Through hole; A: Femal thread at both ends

Type No: Blank: Basic type; D: Double shaft type; J: Double shaft and adjustable stroke type; SA: Single acting spring extend; SB: Single acting spring return

Bore: 12, 16, 20, 25, …, 100

X

Stroke: 25, 50, 75, …

–

Adjustable Stroke: 10, 20, 30, 40, 50, 75, 100

–

Magnet No: Blank: No magnet; S: With magnet

–

Piston Rod Thread Type: Blank: Female thread; M: Male thread; N: No thread

–

Mounting Type: Blank: No; LB; CB; FA; FB

Thread Type: Blank: G; P: PT

ORDER EXAMPLE:
SQ SERIES SINGLE ACTING SPRING EXTEND CYLINDER, THROUGH HOLE MOUNTING TYPE, 40MM BORE, 30MM STROKE, WITH MAGNET, FEMAL THREAD ON PISTON ROD, G THREAD.
ERP CODE IS: SQSA40X30-S

* Also available NSQ series (North american standard)

EXS SERIES DUAL ROD CYLINDER

HOW TO ORDER

Series No	Type No	Bore	X	Stroke	–	Magnet No	–	Thread Type
EXS	M: Slide bearing	6 10 12 16 20 …		25 50 75 …		S : With magnet		Blank: G P : PT T : NPT

ORDER EXAMPLE:
EXS SERIES, SLIDE BEARING TYPE, BORE 6MM, STROKE 30MM ERP CODE IS: EXSM6X30-S
NOTE: THE CYLINDER'S BORE AND STROKE, MOUNTING ACCESSORIES DETAILS ACCORDING TO DRAWINGS.

SG SERIES COMPACT GUIDE CYLINDER

HOW TO ORDER

Series No	Type No.	Bore	X	Stroke	–	Magnet No.	–	Thread Type
SG	L: Ball bushing bearing M: Slide bearing	12 16 20 …		25 50 75 …		S : With magnet		Blank: G P : PT T : NPT

ORDER EXAMPLE:
SG SERIES, LINEAR BEARING, BORE 16MM, STROKE 30MM, EPR CODE IS: SGL16X30-S

EMQ SERIES ROTARY CYLINDER

HOW TO ORDER

Series No	Bore	–	Magnet No	–	Cushion Type	–	Thread Type
EMQ	10 20 30 50		S: With magnet (Magnet is standard)		A: With adjustment bolt R: With shock absorber		Blank: G P : PT T : NPT

ORDER EXAMPLE:
EMQ SERIES ROTARY CYLINDER, BORE 30, WITH ADJUSTMENT BOLT, G THREAD, ERP CODE IS: EMQ30-S-A
NOTE: SPECIFIC BORE AND STROKE OF THE CYLINDER SUBJECT TO THE DRAWING.

SHZ SERIES AIR GRIPPER

HOW TO ORDER

Series	–	Type No.	–	Bore	–	Magnet No.
SHZ: Parrallel air gripper		Blank: Basic type SA: Single acting (N.O.) SB: Single acting (N.C.)		10 16 20 25		S : With magnet (Magnet is standard)

ORDER EXAMPLE:
PARRALLEL AIR GRIPPER,BORE 20,WITH MAGNET,ERP CODE IS:SHZ20-S

MECHANICAL VALVE

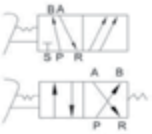

FOOT PEDALE 5/2	PORT SIZE (NPT)	DESCRIPTION
F522-08-T	1/4"	FOOT PEDAL
F522-08L-T		FOOT PEDAL 5/2 WITH LOCK 1/2
F522C-08-T		FOOT PEDAL WITH GUARD

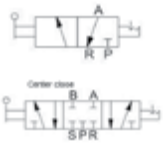

LEVER VALVE	WAY/POSITION	DESCRIPTION	PORT SIZE (NPT)
H322-08-T	3W/2P	DETENT	1/4"
H323-10-T			3/8"
H521-06-T	5W/2P		1/8"
H521-06S-T		SPRING RETURN	
H533-10S-T	5W/3P	SPRING RETURN	3/8"
H533C-10-T		CLOSE CENTER	

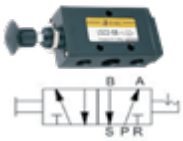

HAND PULL VALVE 5/2	PORT SIZE (NPT)	DESCRIPTION
L523-10-T	3/8"	HAND PULL VALVE 5/2, 3/8, DETENT
L524-15-T	1/2"	HAND PULL VALVE 5/2, 1/2, DETENT

ROTARY VALVE 4/3	PORT SIZE (NPT)	DESCRIPTION
R432-08-T	1/4"	ROTARY VALVE 1/4
R432-10-T	3/8"	ROTARY VALVE 3/8

M SERIES VALVE	WAY/POSITION	DESCRIPTION	PORT SIZE (NPT)
M32-08S7-T	3W/2P	MECANICAL VALVE BLANK	1/4"
M52-08S1B-T	5W/2P	MECH.VALVE TWIST SELECTOR	
MJ32-08S4G-T	3W/2P	MECH.VALVE PUSH BUTTON	
MJ32-08S5R-T		MECH.VALVE PUSH BUTTON FLUSH	
MS32-06S3R-T		MECH.VALVE PUSH BUTTON "E" STOP	1/8"
MS32-06S4G-T		MECANICAL VALVE PUSH BUTTON	
MS32-06S5R-T		MECH.VALVE PUSH BUTTON FLUSH	

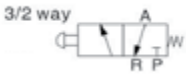

YHS-08FF-T	2W/2P	SLIDE VALVE	1/4"
YHS-10FF-T			3/8"
YHS-15FF-T			1/2"
YHS-20FF-T			3/4"
YHS-25FF-T			1"
RE-06-T		FLOW CONTROL VALVE	1/8"
RE-08-T			1/4"
RE-10-T			3/8"
RE-15-T			1/2"
KKP-06-T	3W/2P	QUICK EXHAUST VALVE	1/8"
KKP-08-T			1/4"
KKP-10-T			3/8"
KKP-15-T			1/2"

RV SERIES STANDARD 3/2 WAY

HOW TO ORDER

Standard Solenoid Valve

Series No. | Ports | Positions | Valve Body ID Code | Controls | Original Status — Port Size | Reset Typt | ID Code | Voltage | Connection Mode | Cover Color — Valve Color — Thread Type

- Series No.: RV
- Ports: 3: 3 ports
- Positions: 2: 2 positions
- Valve Body ID Code: 1: 1Series; 2: 2Series; 3: 3Series; 4: 4Series
- Controls: 1: Single control; 2: Double control
- Original Status: Blank: Normal close; H: Normal open
- Port Size: M5: M5; 06: 1/8"; 08: 1/4"; 10: 3/8"; 15: 1/2"
- Reset Typt: Blank: Spring (Only 4 series single control); Q:Air (1,2,3 series single control)
- ID Code: Blank: Standard type; A: Amisco coil
- Voltage: E1: AC110V; E2: AC220V; E3: AC380V; E4: DC24V; E5: DC12V; E6: AC36V; E7: AC24V; E8: DC110V; E9: DC48V; E10: DC36V
- Connection Mode: Blank: DIN connector; F:Flying leads; K: Waterproof DIN connector (Only for 2,3,4 series)
- Cover Color: Blank: Brown translucent; J: Colorless and translucent; B: Black (Only Waterproof DIN connector)
- Valve Color: Blank: Internal pilot; WB: External pilot
- Thread Type: Blank: G; P: PT; T: NPT

ORDER EXAMPLE:
RV SERIES SOLENOID VALVE, 2 SERIES VALVE BODY SIZE, 3/2 WAYS, SINGLE CONTROL, 1/8" PORT SIZE, AIR RESET FORM, STANDARD COIL, AC220V, DIN CONNECTOR, G THREAD, ERP CODE IS :RV3221-06QE2

RV SERIES STANDARD 5/2 5/3

HOW TO ORDER

Standard Solenoid Valve

Series No. | Ports | Positions | Valve Body Size | Controls | Original Status — Port Size | Reset Form | ID Code | Voltage | Connection Mode | Cover Color | Acting Type — Thread Type

- Series No.: RV
- Ports: 5:5 ports
- Positions: 2:2 positions; 3:3 positions
- Valve Body Size: 1: 1Series; 2: 2Series; 3: 3Series; 4: 4Series
- Controls: 1: Single control; 2:Double control
- Original Status: C: Center close; P: Center pressure; E: Center exhaust (Only for 5/3 way)
- Port Size: M5: M5; 06: 1/8"; 08: 1/4"; 10: 3/8"; 15: 1/2"
- Reset Form: Blank: Spring; Q: Air (Only single control)
- ID Code: Blank: Standard type; A: Amisco coil
- Voltage: E1: AC110V; E2: AC220V; E3: AC380V; E4: DC24V; E5: DC12V; E6: AC36V; E7: AC24V; E8: DC110V; E9: DC48V; E10: DC36V
- Connection Mode: Blank: DIN connector; F: Flying leads; K: Waterproof DIN connector (Only 2、3、4 series is optional)
- Cover Color: Blank: Brown translucent; J: Colorless and translucent
- Acting Type: Blank: Internal pilot; WB: External pilot
- Thread Type: Blank: G; P: PT; T: NPT

ORDER EXAMPLE:
RV SERIES SOLENOID VALVE, 2 SERIES VALVE BODY SIZE, 5/2 WAY, SINGLE CONTROL, 1/4" PORT SIZE, STANDARD COIL,DC24V, DIN CONNECTOR, G THREAD, ERP CODE IS: RV5221-08E4

SR INTEGRATED MANIFOLD (PLUG-IN TYPE)

HOW TO ORDER

SR Valve Group:

Series No. | Valve Body Size | ID code | Valve Numbers | Controls — Port Size | Voltage | Coil Type — Thread Type | Mounting Type

- Series No.: S: Common type; SN: Low power type
- Valve Body Size: 1: 1 series; 2: 2 series
- ID code: R: RV series valve
- Valve Numbers: 3:3valves; 4:4valves; 5:5valves; 6:6valves; 7:7valves; 8:8valves; 9:9valves; 10:10valves; 11:11valves; 12:12valves; 13:13valves; 14:14valves
- Controls: S: Single coil
- Port Size: M5: M5; 06: 1/8"; 08: 1/4"
- Voltage: E4:DC24V; E5:DC12V (Only DC24V for low power type)
- Coil Type: Blank: Plug–in type
- Thread Type: Blank: G; P: PT; T: NPT
- Mounting Type: Blank: No accessory; D: Din guide rail clip with 1 meter din guide rail; DO: Din guide rail clip without din guide rail (Din guide rail packed separatly)

ORDER EXAMPLE:
SR SERIES INTEGRATED MANIFOLD, 1 SERIES VALVE BODY, RV SERIES VALVE, 6 VALVES, SINGLE CONTROL, 1/8 PORT SIZE, VOLTAGE DC24V, PLUG-IN TYPE COIL, G THREAD, NO ACCESSORY, ERP CODE IS: S1R6S-06E4

EI SERIES AIR SOURCE TREATMENT UNIT (NPT)

MAX WORKING PRESSURE: 145BOWL MATERIAL: POLYCARBONATEMANUAL DRAIN

FILTER (5µm)	PORT SIZE NPT	RATED FLOW (L/MIN)
EIF2000-015M-T	1/8"	1000
EIF2000-025M-T	1/4"	1100
EIF3000-035M-T	3/8"	2148
EIF4000-045M-T	1/2"	5430
EIF5000-065M-T	3/4"	8200
EIF5000-105M-T	1"	8200

LUBRICATOR	PORT SIZE NPT	RATED FLOW (L/MIN)
EIL2000-01-T	1/8"	1300
EIL2000-02-T	1/4"	1345
EIL3000-03-T	3/8"	2375
EIL4000-04-T	1/2"	5532
EIL5000-06-T	3/4"	7700
EIL5000-10-T	1"	8000

REGULATOR	PORT SIZE NPT	RATED FLOW (L/MIN)
EIR2000-013-T	1/8"	1178
EIR2000-023-T	1/4"	1200
EIR3000-033-T	3/8"	2212
EIR4000-043-T	1/2"	5312
EIR4000-04	1/2"	5312
EIR5000-063-T	3/4"	6400
EIR5000-103-T	1"	6600

FILTER (5µm) + REGULATOR	PORT SIZE NPT	RATED FLOW (L/MIN)
EIW2000-0135M-T	1/8"	1078
EIW2000-0235M-T	1/4"	1165
EIW3000-0335M-T	3/8"	2177
EIW4000-0435M-T	1/2"	5211
EIW5000-0635M-T	3/4"	6200
EIW5000-1035M-T	1"	6400

FRL	PORT SIZE NPT	RATED FLOW (L/MIN)
EIC3010-0335M-T	3/8"	1956
EIC2000-0135M-T	1/8"	1000
EIC2000-0235M-T	1/4"	1100
EIC3000-0335M-T	3/8"	2105
EIC4000-0435M-T	1/2"	5200
EIC5000-0635M-T	3/4"	6200
EIC5000-1035M-T	1"	6500

E•MC NORTH AMERICA

ONE TOUCH FITTING

HOW TO ORDER

Series No.	O.D. of Tube		Thread size	Thread type
ZPC	04: 4 mm	5/32: 5/32”	M5: M5	Blank: PT
ZPCF	06: 6 mm	3/16: 3/16”	M6: M6	G: G
ZPOC	08: 8 mm	1/4: 1/4”	01: 1/8”	T: NPT
...	10: 10 mm	5/16: 5/16”	02: 1/4”	
	12: 12 mm	3/8: 3/8”	03: 3/8”	
	14: 14 mm	1/2: 1/2”	04: 1/2”	
	16: 16 mm			

ORDER EXAMPLE:
ZPCF Serie, ¼’’ O.D. of tube, 1/8’’ Thread size, G Thread type.

ZPC

ZPCF

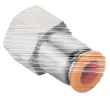

ZPOC

ZPMF

ZPL

ZPLF

ZPLL

ZPB

ZPBF

ZPD

ZPWT

ZPH

ZPHF

ZPGJ

ZPU

ZPV

ZPE

ZPY

ZPM

ZPZA

ZPP

ZPIJ

ZPLJ

ZPYJ

ZPG

ZPW

ZPEW

ZPKG

ZPIG

ZPWJ

ZPKD

ZPK

ZPEG

ZPKB

TUBE

HOW TO ORDER

Series No.	O.D.		X	I.D.	Length	Color code
PU: PU Tube	040: 4 mm	5/32 5/32"		025: 2.5 mm	20M: 20M/Roll	BU: Blue
	060: 6 mm	3/16 3/16"		040: 4 mm	30M: 30M/Roll	B: Black
	080: 8 mm	1/4: 1/4"		050: 5 mm	100M: 100M/Roll	C: Transparent
	100: 10 mm	5/16: 5/16"		060: 6 mm	200M: 200M/Roll	O: Orange
	120: 12 mm	3/8: 3/8"		065: 6.5mm	(Only ø4x ø2.5 and	R: Red
		1/2: 1/2"		080: 8 mm	ø6x ø4 are 200m/Roll)	W: White
	160: 16 mm			100: 10 mm		G: Green
				120: 12 mm		Y: Yellow

STOCKED COLOR TUBE

*Stocked colors tube:

Metric	BU	B	Clear	O	R	W	G	Y
4mm	√	√			√	√	√	√
6mm	√	√						
8mm	√	√						
10mm	√	√						
12mm	√	√						
16mm	√	√						

Imp.	BU	B	Clear	O	R	W	G	Y
5/32”	√	√			√	√	√	√
3/16”	√							
1/4”	√	√			√	√	√	√
5/16”	√	√						
3/8”	√	√						
1/2”	√	√						

* Other colors available upon request

Customized service for any project size

Hydrolico's sales team and outstanding customer service department work closely with technical support to help you select the best product solutions for your needs. Our reliable and durable components and systems will meet all your technical specifications, ensuring your complete satisfaction.

Your one-stop shop for hydraulics, pneumatics and automation.

- High-value fluid power systems
- High hand simulation tools
- Consultation services
- Support team : troubleshooting, field installation, startup, data logging
- Benchmarking
- Turnkey solutions
- Customized training

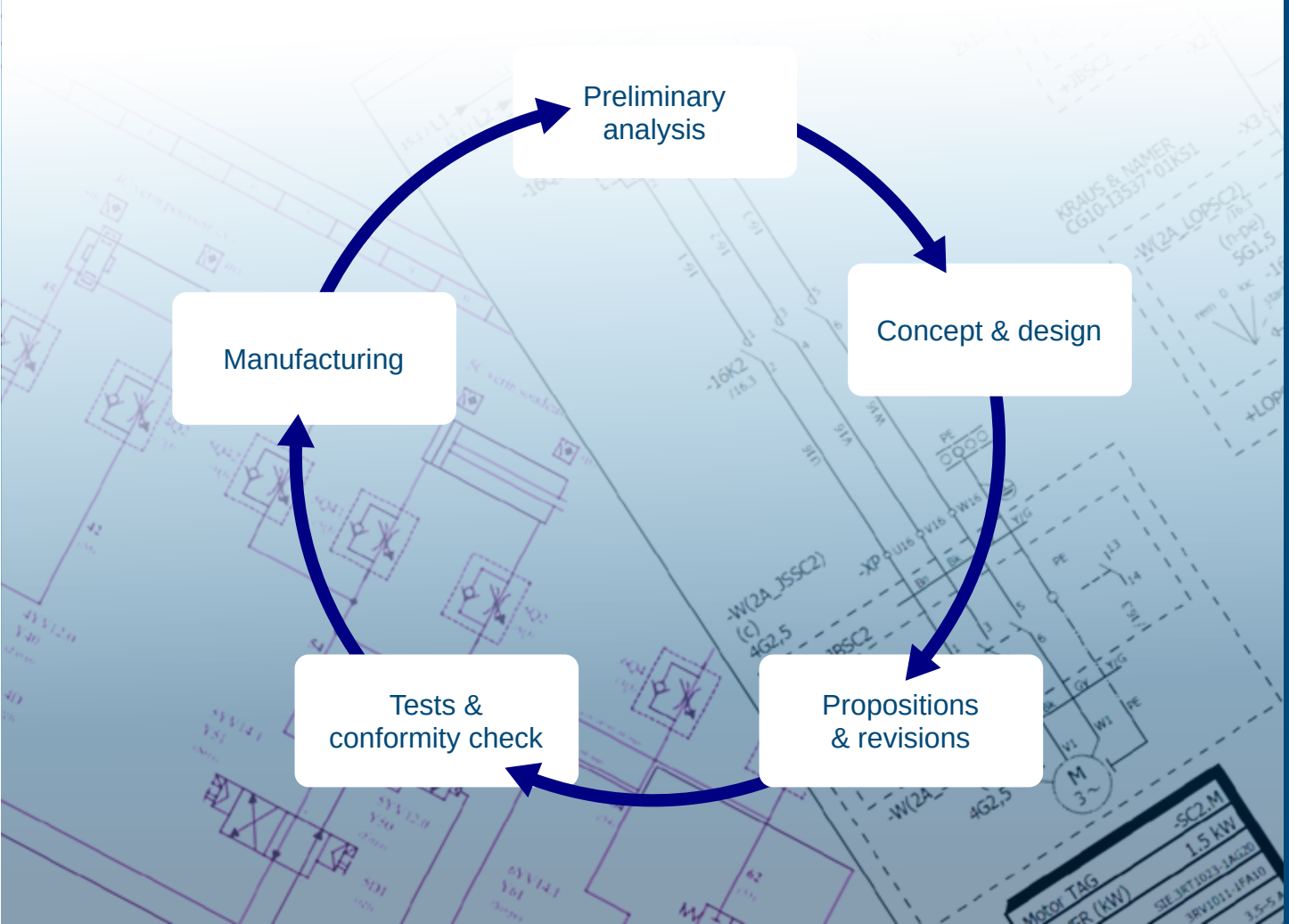

HYDRAULIC POWER UNITS (HPU)

- DESIGN AND MANUFACTURING BASED ON YOUR SPECS
- HYDRAULIC CABINETS
- ELECTRO-HYDRAULIC AND PROPORTIONAL SYSTEMS
- TURNKEY SYSTEMS
- MODIFICATION, REPAIR, RECONDITIONING, STARTER AND TROUBLESHOOTING SERVICES
- ANALYSIS AND SIMULATION WITH AUTOMATION STUDIO™ SOFTWARE

MANIFOLDS

- DESIGN AND MANUFACTURING IN ACCORDANCE WITH NFPA STANDARDS OR BASED ON YOUR SPECS
- ALUMINUM, STEEL AND STAINLESS STEEL
- SINGLE OR FOR HIGH-VOLUME PRODUCTION UNIT

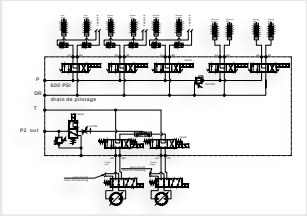

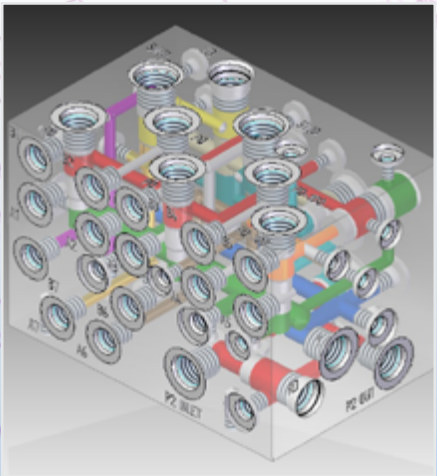

PNEUMATIC SYSTEMS

- DESIGN AND MANUFACTURING BASED ON YOUR SPECS
- ELECTRO-PNEUMATIC SYSTEMS
- INTEGRATED CABINETS
- PNEUMATIC AUTOMATION

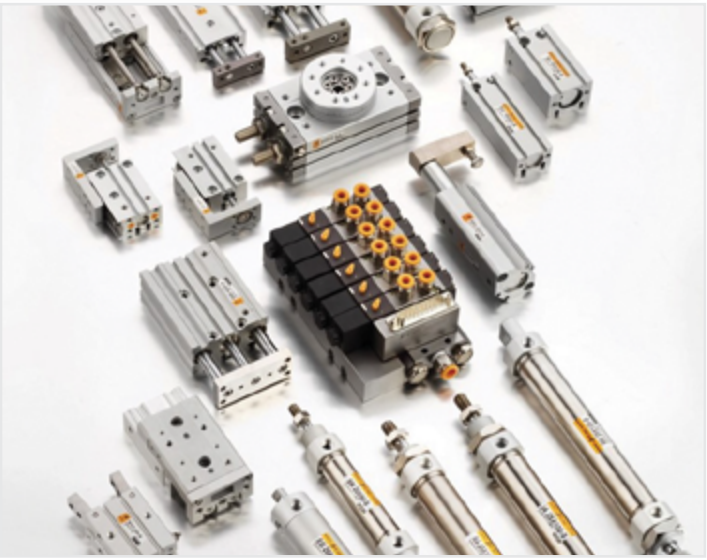

AUTOMATION

- INTEGRATION PARTNER - DRACON
- CUSTOM DESIGN AND MANUFACTURING OF POWER UNITS AND CONTROL PANELS
- AUTOMATION AND CONTROL REPLACEMENT PARTS
- INTEGRATION OF YOUR AUTOMATED SYSTEMS: PLC, HMI (HUMAN MACHINE INTERFACE), SCADA SOFTWARE, SERVOMOTORS, ROBOTS AND VISION SYSTEMS